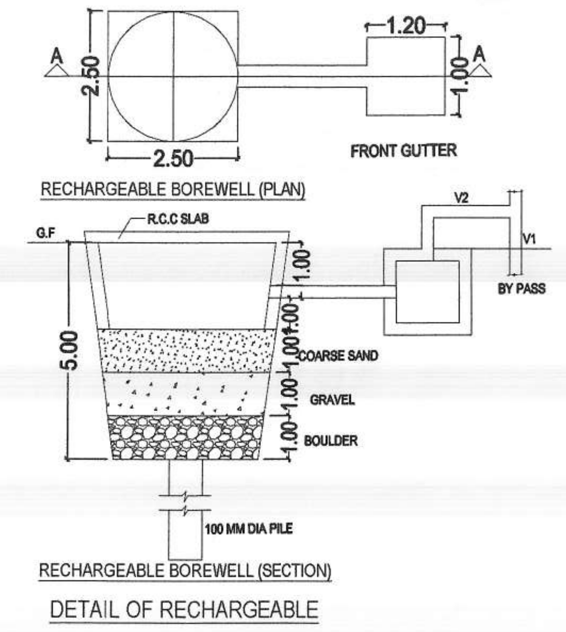

FIRE LEGEND

1. HYDRANT LAYOUT VALVE WET
2. HOSE REEL
3. MANUAL CALL POINT
4. FIRE RESISTANT DOOR OF 1/2 HOUR FIRE RESISTIVITY — F.D.
5. FIRE ALARM CALL POINT
6. MICROPHONE CONNECTION
7. LOUDSPEAKER OUTLET
8. SPRINKLER — S
9. FIRE EXTINGUISHER
10. INDICATOR PANEL — AA
11. AREA COVERAGE BY SMOKE DETECTORS — ASA
12. OVERHEAD WATER TANK FOR FIRE FIGHTING — 26920 LTRS
13. AUDIBLE WARNING DEVICE
14. LIGHTING POINT CONNECTED
15. EMERGENCY LIGHT — E

ELECTRICAL LEGEND

1. C.C.T.V. CAMERA

SCHEDULE OF DOORS & WINDOWS

SL.NO.	TYPE	WIDTH	SILL.	HEIGHT
1.	D1	1.05	0.00	2.15
2.	D2	1.00	0.00	2.15
3.	D3	0.75	0.00	2.15
4.	SD1	2.45	0.00	2.40
5.	W	1.50	0.75	1.65
6.	W1	1.20	0.75	1.65
7.	W2	0.90	1.05	1.35
8.	W3	0.45	1.67	0.88
9.	RS	2.45	0.00	2.15

SPECIFICATION

01) **FOUNDATION :-** R.C.C. PILE FOUNDATION AS/STRUCTURAL DESIGN.
02) **SUPER STRUCTURE :-** R.C.C. FRAMED STRUCTURE AS/STRUCTURAL DESIGN.
03) **BRICKWORK :-** 250 TH. & 125 TH 1st CLASS BRICKWORK IN C.M. 1:6 &1:5 AS/DESIGN.
04) **FLOORING :-** VITRIFIED TILE FLOORING IN GREY CEMENT .
05) **WALL FINISH :-**
(i) INTERNAL - ALL INTERNAL SURFACE SHALL BE PAINTED WITH CEMENT PRIMER OVER FLOAT FINISH OF P.O.P. SURFACE.
(ii) EXTERNAL - ALL EXTERNAL SURFACE SHALL BE PAINTED WITH EXTERIOR GRADE EMULSION PAINT OVER PRIMER.
06) **DOOR :-**
(i) FRAME - 65X100 MM TH. SAL WOOD DOOR FRAME.
(ii) SHUTTER-30 MM TH. SOLID CORE FLUSH DOOR OF I.S.I. MARK AS/DESIGN
07) **WINDOW:-**
(i) FRAME - 65X100 TH. SAL WOOD/ALUMINIUM WINDOW FRAME.
(ii) SHUTTER- FULLY GLAZED HARD WOOD/ ALUMINIUM WINDOW SHUTTER AS/DESIGN.
08) **TOILETS :-**
(i) FLOORING - CERAMIC TILES FLOORING .
(ii) WALLS - CERAMIC TILES DADO UP TO 2100 MM HT.
(iii) SANITARY WARE - WHITE GLAZED VITREOUS (I.S.I. MARK)
(iv) FITTING - CHROMIUM PLATED C.P. FITTINGS (I.S.I. MARK)
09) **ELECTRICAL :-**
(i) ALL INTERNAL WIRING IN CONCEALED CONDUITS WITH COPPER CONDUCTOR.
(ii) ALL ELECTRICAL MODULAR SWITCHES OF I.S.I MARK.
(iii) ADEQUATE LIGHTING/POWER POINT SOCKETS AS/ DESIGN & DRAWING.
10) **WATER SUPPLY :-** ROUND THE CLOCK WATER SUPPLY BY MEANS OF OWN BORING & OVERHEAD TANK.

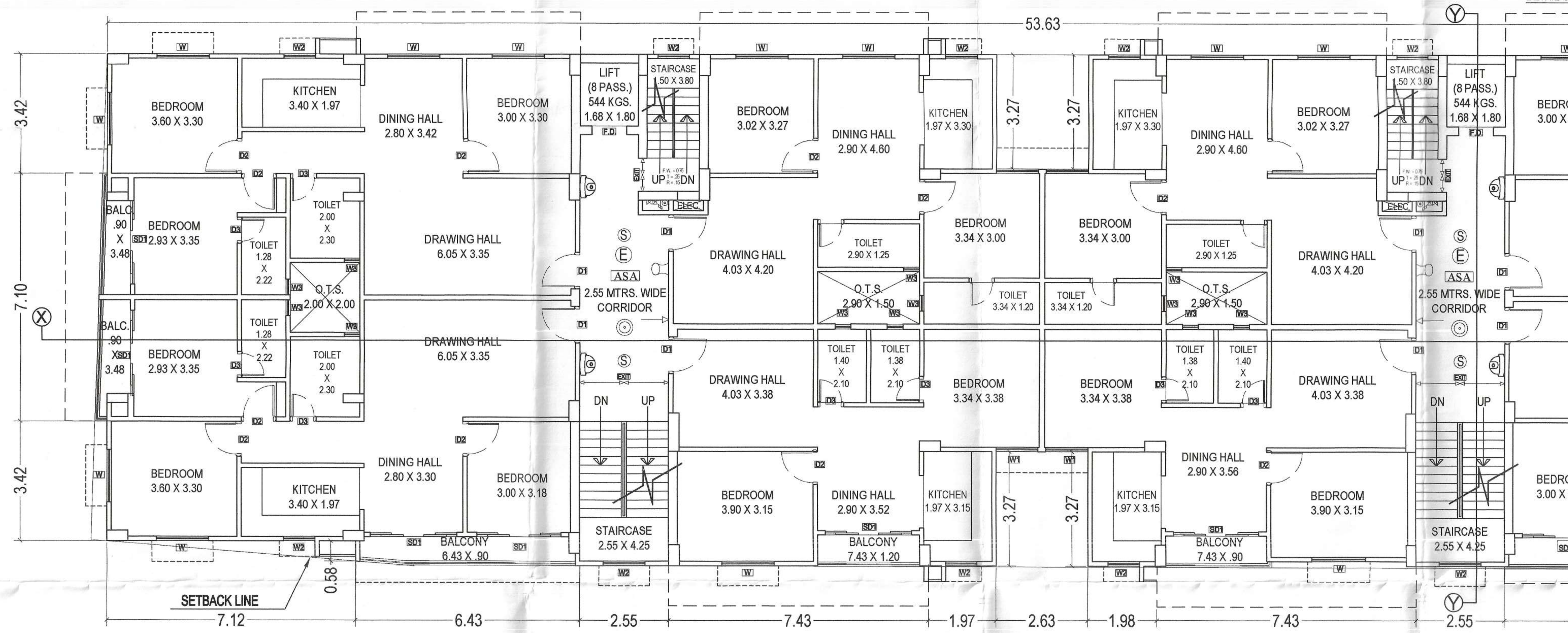

FIRST FLOOR PLAN

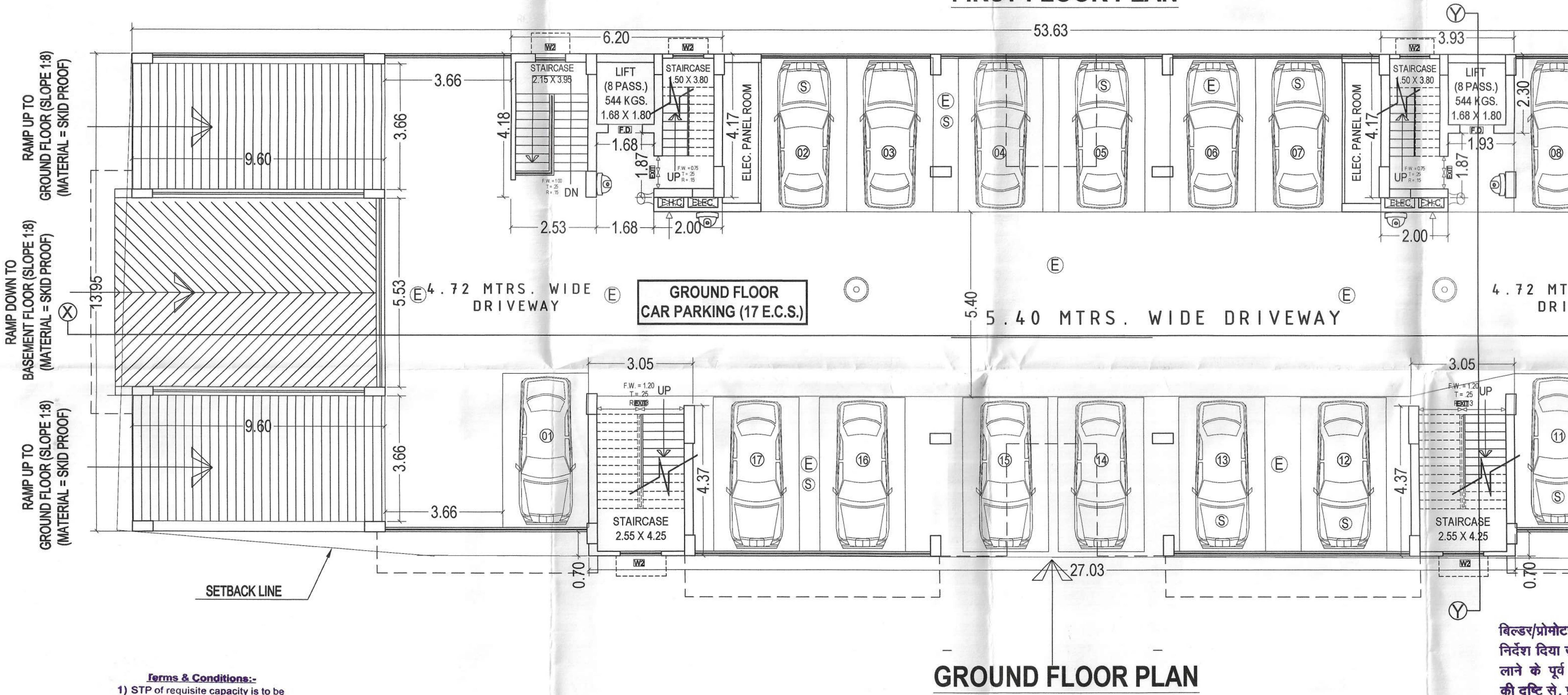

GROUND FLOOR PLAN

Terms & Conditions:-
1) STP of requisite capacity is to be installed in the campus by the Builder/Owner.
2) Water Harvesting and Green area is to be maintained in the premises
3) Solar power is to be installed in the campus

बिल्डर/प्रोमोटर/भू–स्वामी/संबंधित वास्तुविद/अभियंता को निर्देश दिया जाता है कि भवन के निर्माण तथा उपयोग में लाने के पूर्व आवासीय/व्यावसायिक कम्प्लेक्स में सुरक्षा की दृष्टि से, प्रवेश द्वार निकास द्वार, सीढ़ी, लिफ्ट, पार्किंग प्रत्येक फ्लोर, गेट के बाहर की ओर लोकेशन के साथ तथा अन्य वांछित महत्वपूर्ण स्थानों पर उच्च मानक के C.C.T.V. कैमरा का अधिष्ठापन करेंगे अन्यथा संबंधित एक्ट एवं बाईलॉज के सुसंगत धाराओं के तहत् कारवाई किया जायेगा।

PROJECT DETAILS

PROPOSED **"RESIDENTIAL APARTMENT"** FOR
DEVELOPER : SANRACHNA BUILDCON
THROUGH IT'S PARTNER : SUSHIL KUMAR SINGH
LAND OWNERS :
1. SRI RAKESH KUMAR ARYA,S/O-LT. LAKSHMI NARAYAN SINGH
2. SRI VIJAY RAJ,S/O-SRI RAKESH KUMAR ARYA
3. RAMESH KR. SUDHANSHU,S/O-LT. LAKSHMI NARAYAN SINGH
4. SMT. ASHA SINGH,W/O-SRI NIRANJAN PRASAD SINGH
5. SRI JAGAT NARAYAN SINGH,S/O-LATE SHIVNANDAN SINGH
6. SRI NEERA SINGH,W/O-LATE DHIRAJ KUMAR
7. SRI NIRAJ KUMAR,S/O-SRI JAGAT NARAYAN SINGH

AT PLOT NO. (C.S.) : 1251 (PART)
KHATA NO. : 160 , MAUZA : DIGHA , TAUZI NO. : 15270
PRESENT P.S. NAME : DIGHA , SURVEY P.S. & PARGANA : PHULWARI
TOWN & DISTRICT : PATNA (BIHAR)

NORTH :	SCALE	DRG.NO.
	1:100	02/04

Rakesh Kumar Arya, Vijay Raj, Ramesh Kumar Sudhanshu, Asha Singh, Neera Sinha [signatures]
SIGN. OF OWNER(S)

BRAJESH KUMAR SINHA
Registration No. BR/UDHD/SE/23-0071
UDHD, Government of Bihar
SIGN. OF STRUCTURAL ENGINEER

SANRACHNA BUILDCON
Sushil Kumar Singh, Manoj Kumar Singh
PARTNER
SIGN. OF DEVELOPER(S)

VISHNU KUMAR CHOUDHARY
VISHNU KUMAR CHOUDHARY
CoA Regn. No. CA/1994/16909
Empanelled at Serial No. AR00288
Vide Memo No.-2529, dt.12.06.2023 of
UD&HD, Bihar
SIGN. OF ARCHITECT

राकेश कुमार
सहायक नगर योजना पर्यवेक्षक
शहरी योजना शाखा
पटना नगर निगम

PATNA MUNICIPAL CORPORATION
PATNA REGIONAL DEVELOPMENT AUTHORITY (DISSOLVED)
P|DIGHA|PRN-18+G+5| 866 |2023
Case No........................20..........
Sanction of Plan Accorded under Section 315, 316 & 317 of the Bihar Municipal Act 2007 by the Municipal Commissioner, Patna on..............
Date..... 29/11/2023 .....

SANCTION OF PLAN ACCORDED

03/04/24
निदेशक
शहरी योजना
पटना नगर निगम, पटना
02/04/24

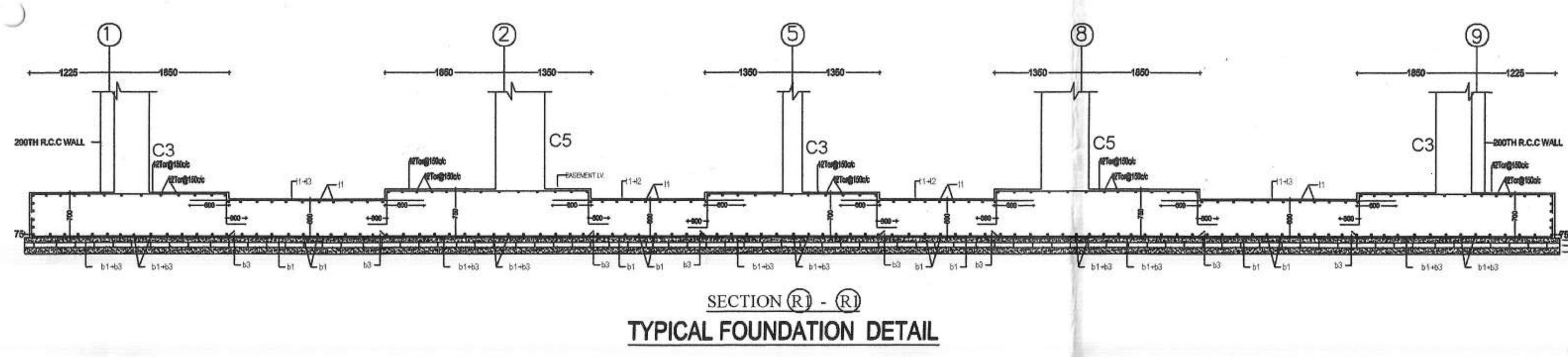

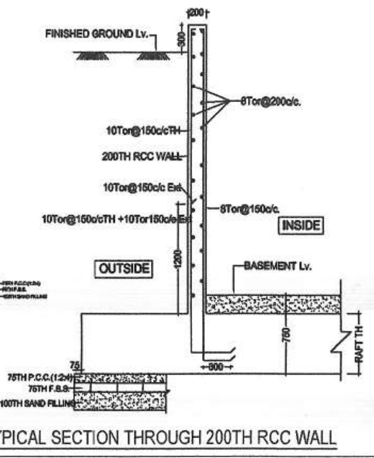

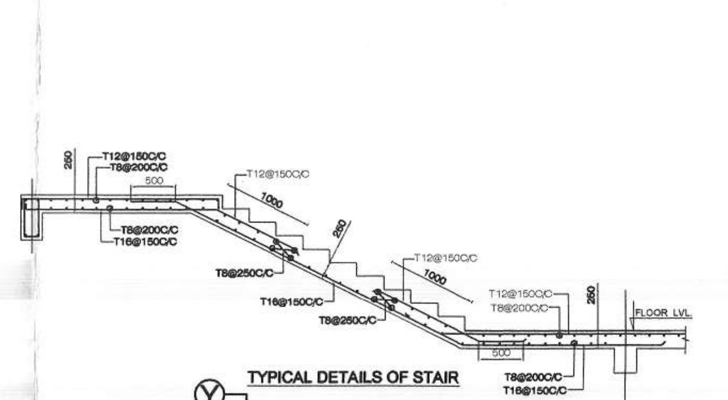

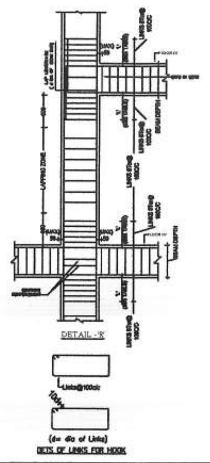

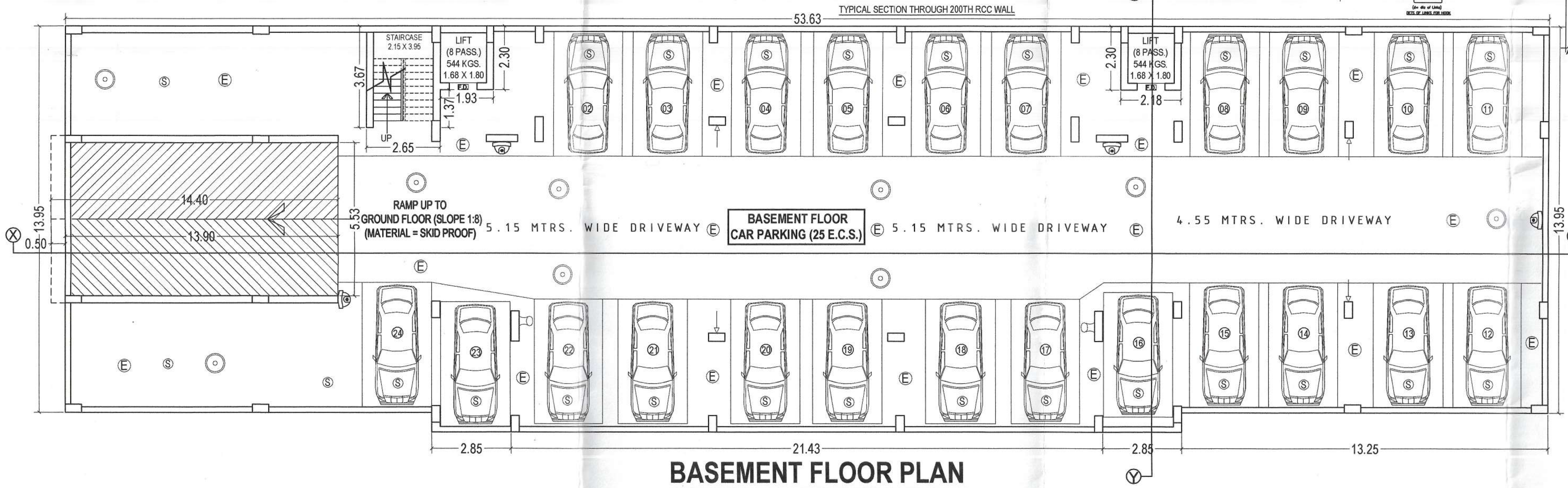

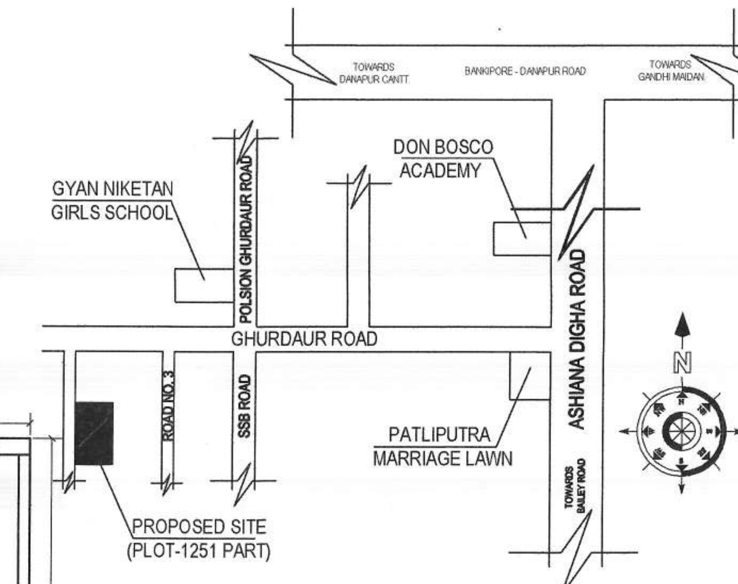

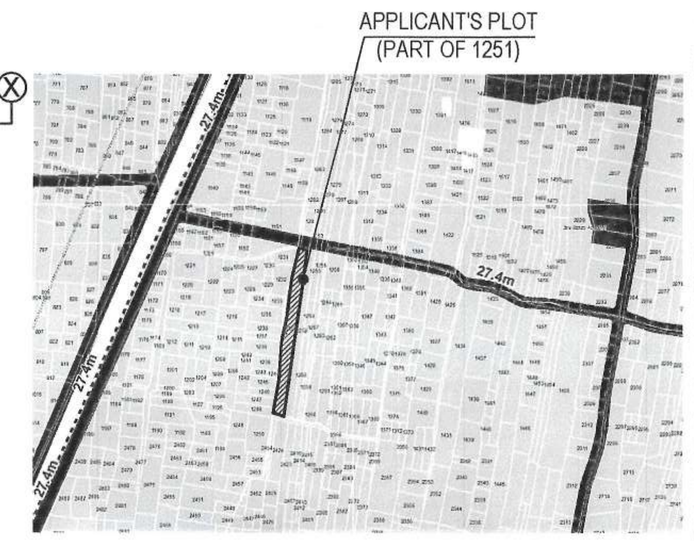

FIRE LEGEND

1. HYDRANT LAYOUT VALVE WET
2. HOSE REEL
3. MANUAL CALL POINT
4. FIRE RESISTANT DOOR OF ½ HOUR FIRE RESISTIVITY — F.D.
5. FIRE ALARM CALL POINT
6. MICROPHONE CONNECTION
7. LOUDSPEAKER OUTLET
8. SPRINKLER — S
9. FIRE EXTINGUISHER
10. INDICATOR PANEL — A A
11. AREA COVERAGE BY SMOKE DETECTORS — A S A
12. OVERHEAD WATER TANK FOR FIRE FIGHTING — 26920 LTRS
13. AUDIBLE WARNING DEVICE
14. LIGHTING POINT CONNECTED
15. EMERGENCY LIGHT — E

ELECTRICAL LEGEND

1. C.C.T.V. CAMERA

PARKING CALCULATION

1. TOTAL BUILT UP AREA = 4007.50 SQM.
REQU. PARKING :-
25 % OF TOTAL B.U.A. (1) = 25% OF 4007.50 = 1001.88 SQM
2. PARKING SPACE PROVIDE ON GROUND FLOOR = 576.46 SQM
3. PARKING SPACE PROVIDE ON BASEMENT FLOOR = 747.96 SQM
TOTAL PARKING PROVIDED {(2)+(3)} = 1324.42 SQM.

RAIN WATER HARVESTING CALCULATION

REQUIRED AREA FOR RECHARGING PIT
= 6M³/100 SQ.M OF ROOF AREA
= FOR 830.90 SQM. = 170.77 / 100X6 = 49.85 M³
= PROVIDED 2 N0S. OF RECHARGING PIT=2(2.5 X 2.5 X 4) (MTRS.)
= 50.00 CU. MTRS.

WATER TANK CALCULATION

TOTAL NO. OF FLATS = 42 NOS.
ONE FLAT REQU. 6 PERSONS
TOTAL NO. OF PERSONS = 252 PERSONS
ONE PERSON REQUIRES 135 LTRS.
TOTAL REQUIRED WATER 135 X 252 = 34020.00 LTRS. / DAY
TOTAL REQU. AREA OF WATER TANK = 34020.00/1000LTR
= 34.02 CU LTR
(1) WATER TANK SIZE=(6.10 X 2.55 X 1.50)+0.30 F.B.=23.33 CU LTR
(2) WATER TANK SIZE=(3.67 X 1.50 X 1.50)+0.30 F.B.= 8.26 CU LTR
TOTAL VOL. OF TANK PROVIDED = 2(23.33+8.26) = 63.18 CU. LTRS.

SEPTIC TANK CALCULATION

TOTAL NO. OF FLATS = 42 NOS.
ONE FLAT REQU. = 6 PERSONS
TOTAL NO. OF PERSONS = 252 PERSONS
ONE PERSON REQU. VOLUME = 0.085 CU.M/DAY
TOTAL REQU. SLUDGE VOLUME = 252 X 0.085 = 21.42 CU.M. / DAY
VOLUME OF REQU. SEPTIC TANK = 21.42 CU.MTR.
DIMENSIONS OF PROVIDED SEPTIC TANK
= (6.00 X 2.50 X 1.50) + 0.3 FB = 22.50 CU.MTR.
TOTAL = 22.50 CU.MTR.

AREA STATEMENT

TOTAL PLOT AREA AS / DEED = 2946.33 SQM
TOTAL PLOT AREA AS / DEVELOPMENT AGREEMENT = 1677.89 SQM
TOTAL PLOT AREA AS / SITE = 1611.15 SQM
NET TOTAL PLOT AREA AS / SITE = 1611.15 SQM

FLOOR	GROSS B.U.A.	DEDUCTION	NET B.U.A.
BASEMENT FLOOR	767.13 SQM	747.96 SQM	19.17 SQM
GROUND FLOOR	767.13 SQM	624.52 SQM	142.61 SQM
FIRST FLOOR	791.24 SQM	37.96 SQM	753.28 SQM
SECOND FLOOR	830.90 SQM	57.79 SQM	773.11 SQM
THIRD FLOOR	830.90 SQM	57.79 SQM	773.11 SQM
FOURTH FLOOR	830.90 SQM	57.79 SQM	773.11 SQM
FIFTH FLOOR	830.90 SQM	57.79 SQM	773.11 SQM
TOTAL	5649.10 SQM	1641.60 SQM	4007.50 SQM

F.A.R. = 4007.50 / 1611.15 = 2.49

GREEN AREA CALCULATION

TOTAL NET PLOT AREA = 1608.45 m²
GREEN AREA REQUIRED @10% OF NET PLOT = 160.85 SQM
TOTAL GREEN AREA PROVIDED = 162.60 m².
(PROVIDED GREEN SPACE 0.75 MTR. ALONG RIGHT & REAR,2 MTR. WIDE IN FRONT EXCLUDING 14.00 MTR. WIDE ENTRANCE)

SCHEDULE OF DOORS & WINDOWS

SL.NO.	TYPE	WIDTH	SILL.	HEIGHT
1.	D1	1.05	0.00	2.15
2.	D2	1.00	0.00	2.15
3.	D3	0.75	0.00	2.15
4.	SD1	2.45	0.00	2.40
5.	W	1.50	0.75	1.65
6.	W1	1.20	0.75	1.65
7.	W2	0.90	1.05	1.35
8.	W3	0.45	1.67	0.88
9.	RS	2.45	0.00	2.15

SPECIFICATION

01) **FOUNDATION :-**
R.C.C. PILE FOUNDATION AS/STRUCTURAL DESIGN.
02) **SUPER STRUCTURE :-**
R.C.C. FRAMED STRUCTURE AS/STRUCTURAL DESIGN.
03) **BRICKWORK :-**
250 TH. & 125 TH 1st CLASS BRICKWORK IN C.M. 1:6 &1:5 AS/DESIGN.
04) **FLOORING :-**
VITRIFIED TILE FLOORING IN GREY CEMENT .
05) **WALL FINISH :-**
(i) INTERNAL - ALL INTERNAL SURFACE SHALL BE PAINTED WITH CEMENT PRIMER OVER FLOAT FINISH OF P.O.P. SURFACE.
(ii) EXTERNAL - ALL EXTERNAL SURFACE SHALL BE PAINTED WITH EXTERIOR GRADE EMULSION PAINT OVER PRIMER.
06) **DOOR :-**
(i) FRAME - 65X100 MM TH. SAL WOOD DOOR FRAME.
(ii) SHUTTER-30 MM TH. SOLID CORE FLUSH DOOR OF I.S.I. MARK AS/DESIGN
07) **WINDOW:-**
(i) FRAME - 65X100 TH. SAL WOOD/ALUMINIUM WINDOW FRAME.
(ii) SHUTTER- FULLY GLAZED HARD WOOD/ ALUMINIUM WINDOW SHUTTER AS/DESIGN.
08) **TOILETS :-**
(i) FLOORING - CERAMIC TILES FLOORING .
(ii) WALLS - CERAMIC TILES DADO UP TO 2100 MM HT.
(iii) SANITARY WARE - WHITE GLAZED VITREOUS (I.S.I. MARK)
(iv) FITTING - CHROMIUM PLATED C.P. FITTINGS (I.S.I. MARK)
09) **ELECTRICAL :-**
(i) ALL INTERNAL WIRING IN CONCEALED CONDUITS WITH COPPER CONDUCTOR.
(ii) ALL ELECTRICAL MODULAR SWITCHES OF I.S.I MARK.
(iii) ADEQUATE LIGHTING/POWER POINT SOCKETS AS/ DESIGN & DRAWING.
10) **WATER SUPPLY :-**
ROUND THE CLOCK WATER SUPPLY BY MEANS OF OWN BORING & OVERHEAD TANK.

PROJECT DETAILS

PROPOSED **"RESIDENTIAL APARTMENT"** FOR
DEVELOPER : SANRACHNA BUILDCON
THROUGH IT'S PARTNER : SUSHIL KUMAR SINGH
LAND OWNERS :
1. SRI RAKESH KUMAR ARYA,S/O-LT. LAKSHMI NARAYAN SINGH
2. SRI VIJAY RAJ,S/O-SRI RAKESH KUMAR ARYA
3. SRI RAMESH KR. SUDHANSHU,S/O-LT. LAKSHMI NARAYAN SINGH
4. SMT. ASHA SINGH,W/O-SRI NIRANJAN PRASAD SINGH
5. SRI JAGAT NARAYAN SINGH,S/O-LATE SHIVNANDAN SINGH
6. SRI NEERA SINGH,W/O-LATE DHIRAJ KUMAR
7. SRI NIRAJ KUMAR,S/O-SRI JAGAT NARAYAN SINGH
AT **PLOT NO. (C.S.)** : 1251 (PART)
KHATA NO. : 160 , **MAUZA** : DIGHA , **TAUZI NO.** : 15270
PRESENT P.S. NAME : DIGHA , **SURVEY P.S. & PARGANA** : PHULWARI
TOWN & DISTRICT : PATNA (BIHAR)

NORTH :	SCALE	DRG.NO.
	1:110	01/04

SIGN. OF OWNER(S)
SIGN. OF STRUCTURAL ENGINEER — BRAJESH KUMAR SINHA, Registration No. BR/UDHD/SE/23-0071, UDHD, Government of Bihar
SANRACHNA BUILDCON PARTNER
SIGN. OF DEVELOPER(S)
VISHNU KUMAR CHOUDHARY — SIGN. OF ARCHITECT, UD&HD, Bihar

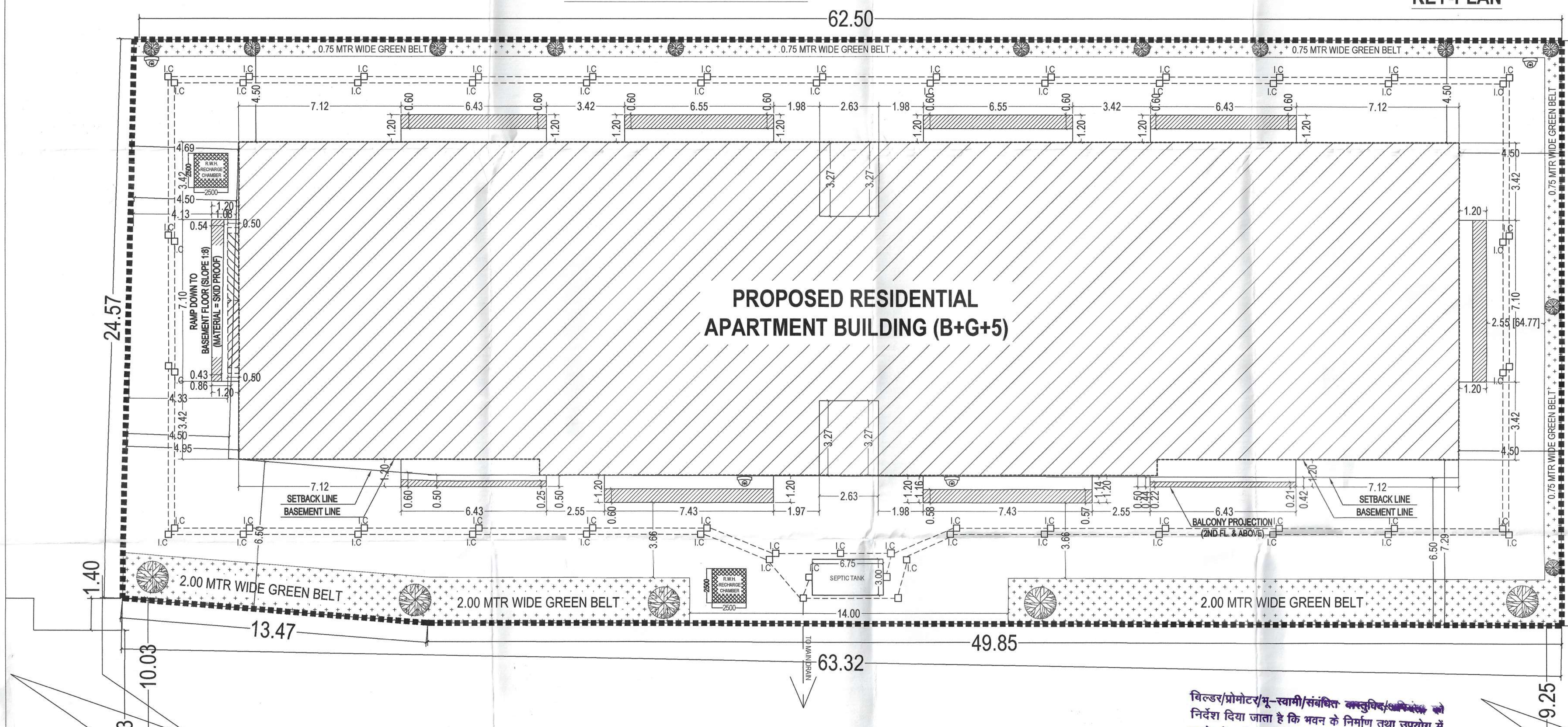

Terms & Conditions:-
1) STP of requisite capacity is to be installed in the campus by the Builder/Owner
2) Water Harvesting and Green area is to be maintained in the premises
3) Solar power is to be installed in the campus

बिल्डर/प्रोमोटर/भू-स्वामी/संबंधित अनुज्ञप्ति/अभियंता को निर्देश दिया जाता है कि भवन के निर्माण तथा उपयोग में लाने के पूर्व आवासीय/व्यवसायिक कम्पलेक्स में सुरक्षा की दृष्टि से, प्रवेश द्वार निकास द्वार, सीढ़ी, लिफ्ट, पार्किंग प्रत्येक फ्लोर, गेट के बाहर की ओर लोकेशन के साथ तथा अन्य वांछित महत्वपूर्ण स्थानों पर उच्च मानक के C.C.T.V. कैमरा का अधिष्ठापन करेंगे अन्यथा संबंधित एक्ट एवं नाईलॉज के सुसंगत धाराओं के तहत् कारवाई किया जायेगा।

SITE PLAN

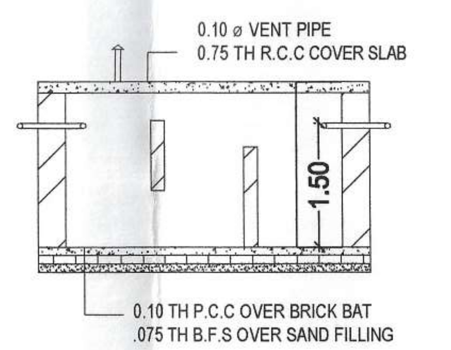

SECTION AT-S S

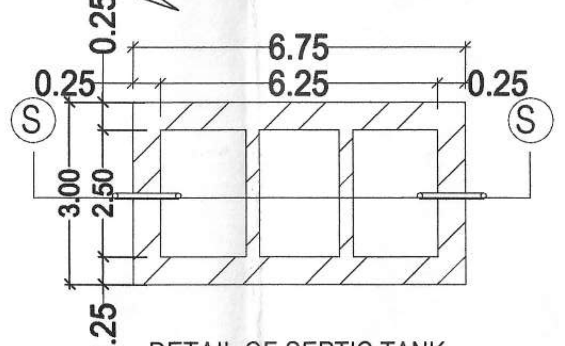

DETAIL OF SEPTIC TANK

राकेश कुमार
सहायक नगर योजना पर्यवेक्षक
शहरी योजना शाखा
पटना नगर निगम

PATNA MUNICIPAL CORPORATION
PATNA REGIONAL DEVELOPMENT AUTHORITY (DISSOLVED)
P.DIGHA/PRN-18+G+5/866/2023
Case No..........................20............
Sanction of Plan Accorded **under Section 315, 316 & 317** of the Bihar Municipal **Act 2007** by the Municipal Commissioner, Patna on..............
Date.....29/11/2023.....................
SANCTION OF PLAN ACCORDED

निदेशक
शहरी योजना
पटना नगर निगम, पटना