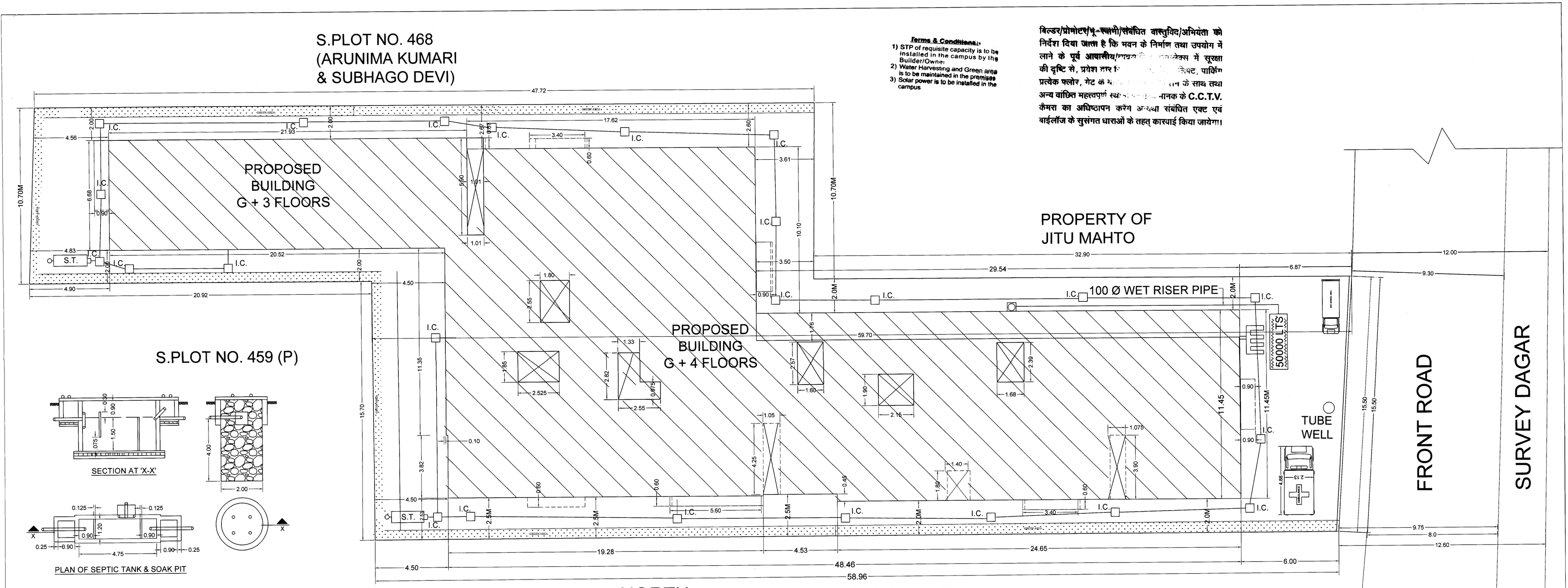

Terms & Conditions:

1) STP of requisite capacity is to be installed in the campus by the Builder/Owner
2) Water Harvesting and Green area is to be maintained in the premises
3) Solar power is to be installed in the campus

बिल्डर/प्रोमोटर/भू-स्वामी/संबंधित वास्तुविद/अभियंता को निर्देश दिया जाता है कि भवन के निर्माण तथा उपयोग में लाने के पूर्व आवासीय/[illegible] में सूरक्षा की दृष्टि से, प्रवेश द्वार [illegible], पार्किंग प्रत्येक फ्लोर, गेट के [illegible] के साथ तथा अन्य वांछित महत्वपूर्ण स्थ[illegible] नक के C.C.T.V. कैमरा का अधिष्ठापन करेंगे अन्यथा संबंधित एक्ट एवं बाईलॉज के सुसंगत धाराओं के तहत् कारवाई किया जायेगा।

SECTION AT 'X-X'

PLAN OF SEPTIC TANK & SOAK PIT

SITE PLAN

SCALE : 1 : 100

NORTH

S.PLOT NO. 459 (P)

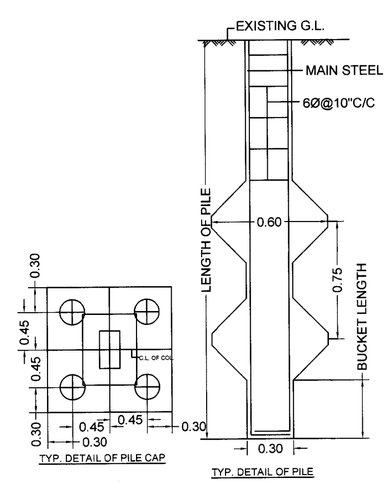

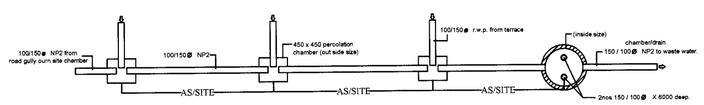

Plan of Surface Water Percolation System To Sub-Soil WATER HARVESTING PLANT

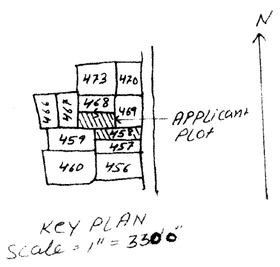

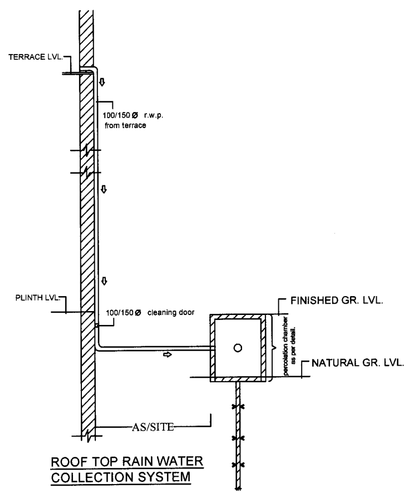

ROOF TOP RAIN WATER COLLECTION SYSTEM

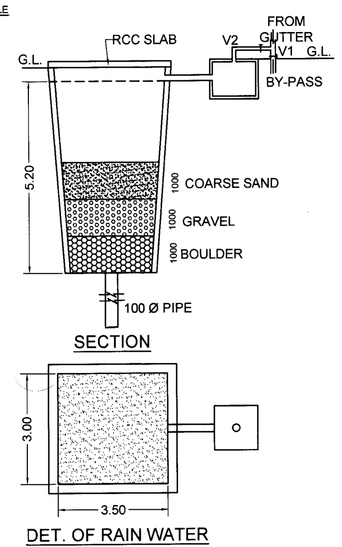

SECTION

DET. OF RAIN WATER RECHARGE BORE WELL

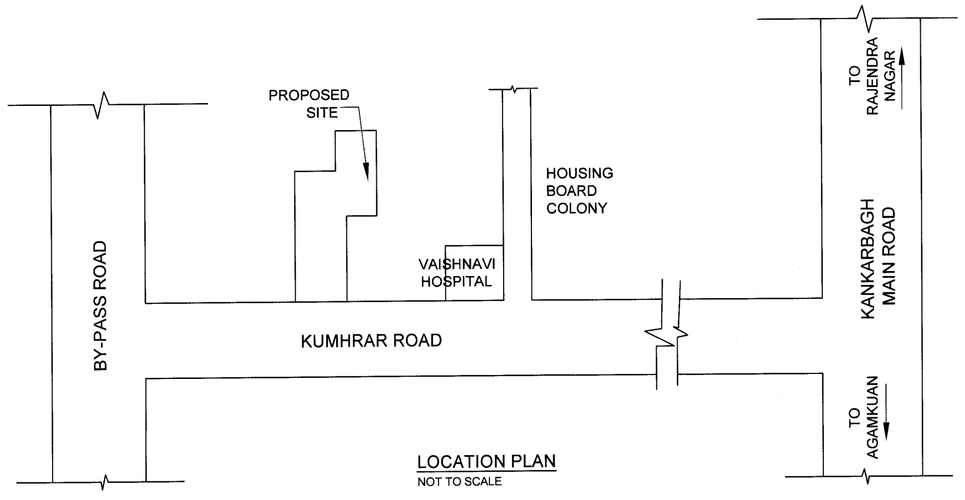

LOCATION PLAN

NOT TO SCALE

FIRE LEGEND:

1. HYDRANT POINT ..... W
2. HOSE REEL .....
3. ISI MKD. FIRE EXTINGUISHER..... CO2/DCP
4. ILLUMINATED EXIT DIRECTIONAL SIGN ..... EXIT
5. SEAMESE CONNECTION .....
6. EMERGENCY LIGHT .....
7. MANUAL CALL ALARM POINT .....
8. AREA COVERED WITH AUTOMATIC SPRINKLER'S INSTALLATION ..... S
9. TERRACE TANK ..... 33600 LTS.
10. F.R. CHECK DOOR ..... FD
11. UNDERGROUND WATER TANK ... 50000 LTS

SEPTIC TANK CALCULATIONS:

TOTAL NO. OF FLATS = 34 NOS.
POPULATION @ 5 PERSONS/UNIT = 170 NOS.
SEPTIC TANK CAP.REQD. @ 0.085 CU.M./H = 14.45 CU.M.

2 NOS. SEPTIC TANKS PROVIDED OF SIZE
4.50 X 1.20 X 1.50 X 2 NOS. = 16.20 CU.M.

GREEN AREA CALCULATION:

TOTAL PLOT AREA = 1436.14 SQ.M.
GREEN AREA REQUIRED @ 10% OF
THE PLOT AREA = 143.6 SQ..M.
TOTAL GREEN AREA PROVIDED = 155.96 SQ.M.

RAIN WATER HARVESTING CALCULATIONS:

TOTAL TERRACE/ROOF AREA = 845.59 SQ.M.
100 SQ.M. TERRACE AREA REQD. 6.0 CU.M. PIT
THEREFORE PIT REQD. = 50.73 CU.M.
RECHARGE PIT PROVIDED OF SIZE:
3.00 X 3.50 X 5.20 = 54.60CU.M.

AREA STATEMENT:

TOTAL PLOT AREA AS PER DEEDS = 1473.99 SQ.M.
TOTAL PLOT AREA AS PER THE SITE = 1436.14 SQ.M.
TOTAL PROPOSED NET PLOT AREA = 1436.14 SQ.M.

PROPOSED BUILT-UP AREA:

GROUND/STILTS FLOOR ... :	36.39	SQ.M.
FIRST FLOOR .....:	837.65	" "
SECOND FLOOR .....:	837.65	" "
THIRD FLOOR .....:	837.65	" "
FOURTH FLOOR .....:	685.95	" "
TOTAL :	3235.29	SQ. M.

F. A. R. USED = 2.25

GROUND FLOOR/STILTS PARKING
AREA = 834.89 SQ.M.

PARKING CALCULATION:

TOTAL PROPOSED BUILT-UP AREA =3235.29 SQ.M.

PARKING AREA REQUIRED @
25% OF 3235.29 SQ.M. ..... = 808.82 SQ.M.

PARKING AREA PROVIDED = 834.89 SQ.M.

WATER SUPPLY CALCULATIONS:

TOTAL NO. OF FLATS = 34 NOS.
POPULATION @ 5 PERSONS/UNIT = 170 NOS.
WATER REQD. @ 135 LTS./H/DAY = 22950 LTS.

FOR FIRE FIGHTING ..... = 10000 LTS.

TOTAL WATER TANK CAP. REQD. = 32950 LTS.
(32.60 CU.M.)

WATER STORAGE TANK PROVIDED OF SIZE =
6.30 X 3.30 X 1.60 = 33.26 CU.M. = 33600 LTS.

PLAN OF THE PROPOSED RESIDENTIAL BUILDING ON SURVEY PLOT NOS. 458 & 468(P), KHATA NOS. 326 & 460, TAUZI NOS. 189 & 264, THANA NO.12, P.S. AGAMKUAN, MAUZA - KUMHRAR, DISTT. PATNA BELONGING TO:
1. SMT. PRABHAVATI DEVI ALIAS SMT. GAYATRI SINGH W/O SRI CHANDRAMADITYA SINGH
2. SMT. BINA JHA W/O SRI ASHOK KUMAR JHA.
BUILDER & DEVELOPER: KUMAR BUILDCON PVT. LTD., PATNA THROUGH ITS DIRECTOR SRI PRAKASH KUMAR, S/O SRI MURALI PRASAD SINHA.

SCALE : 1 : 100	DATE :	DRG. NO. : 1/4

Signature of Owner with date
OWNER'S SIGNATURE

Anupam Sunil
AR/13/15 PMC
CA/2010/50120
ARCHITECT'S/ENGINEER'S SIGNATURE

S. Vijay Kumar
Structural Engineer
Registration No. SE/08/58/PMC
Engineer-in-Chief Engineer-cum-Chief Architecture, Inc.
STRUCTURE ENGINEER SIGNATURE

PATNA MUNICIPAL CORPORATION
PATNA REGIONAL DEVELOPMENT AUTHORITY (DISSOLVED)
Case No. P/KUMHRAR/PRN-G+4/3068/2021 ..... 20.....
Sanction of Plan Accorded under Section 315, 316 & 317 of the Bihar Municipal Act 2007 by the Municipal Commissioner, Patna on.....
Date....24/03/2023.....
SANCTION OF PLAN ACCORDED

24/03/2023
शंभू कुमार
प्रधान प्रारूपक
शहरी योजना
पटना नगर निगम

24/3/23
निदेशक
शहरी योजना
पटना नगर निगम, पटना
24/03/23