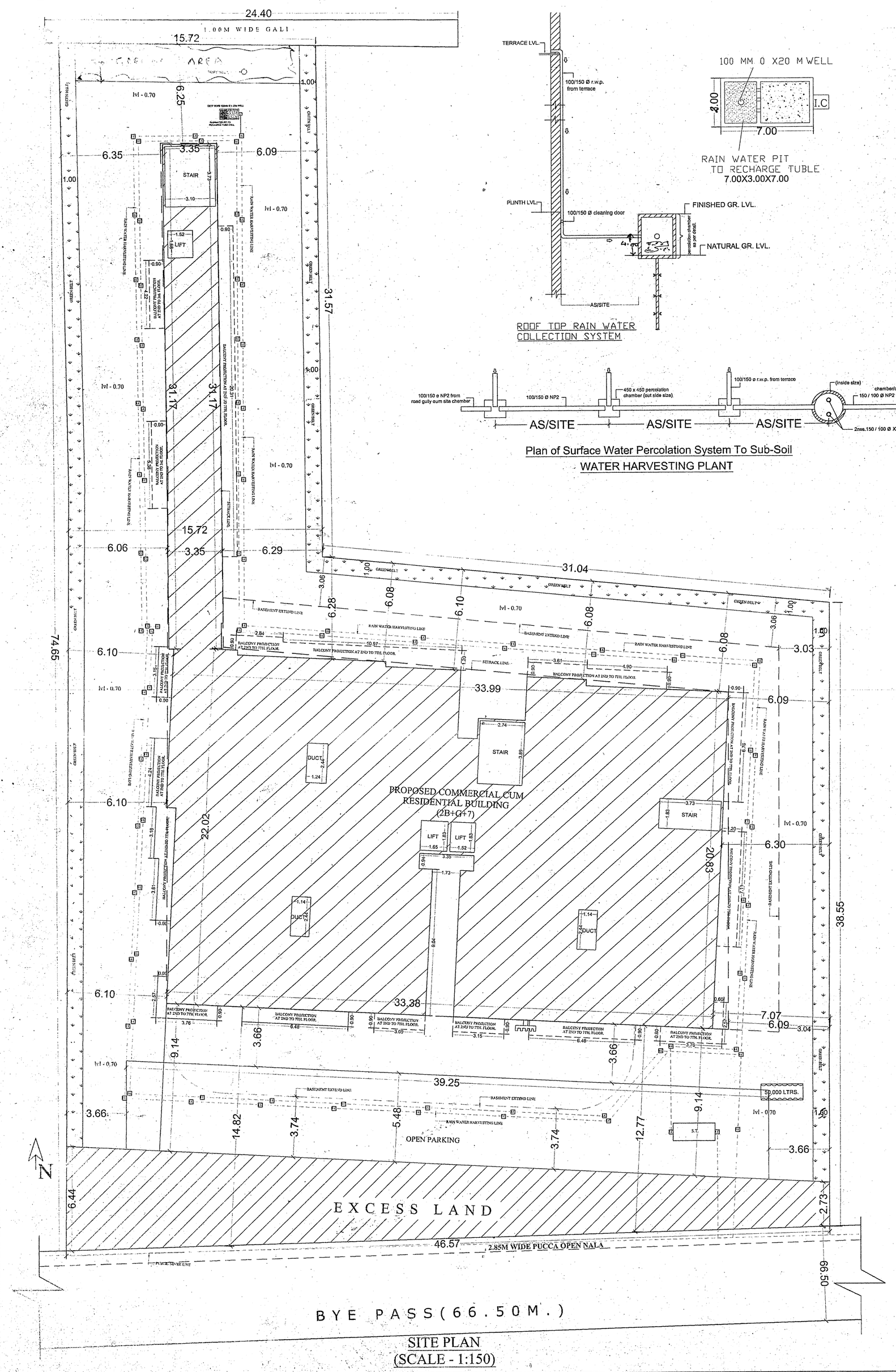

SITE PLAN
(SCALE - 1:150)

ROOF TOP RAIN WATER COLLECTION SYSTEM

Plan of Surface Water Percolation System To Sub-Soil
WATER HARVESTING PLANT

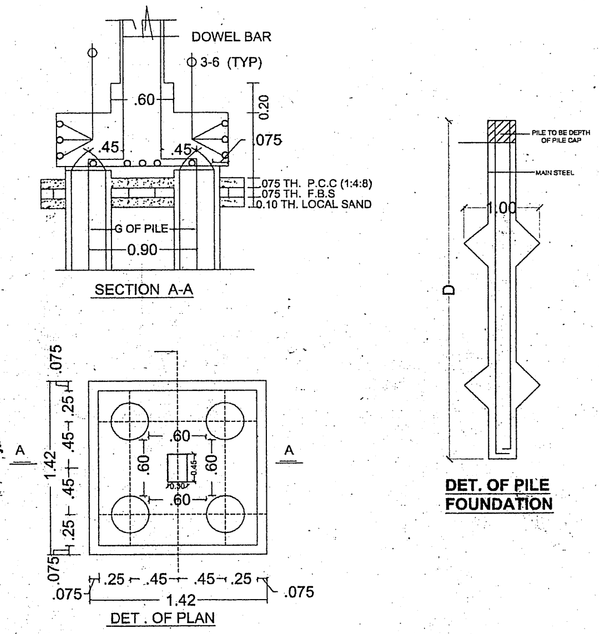

DET. OF PILE FOUNDATION

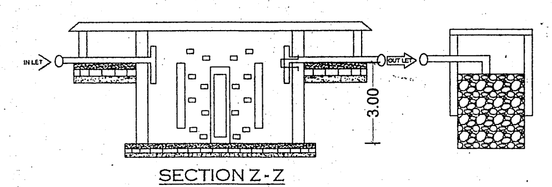

SECTION Z-Z

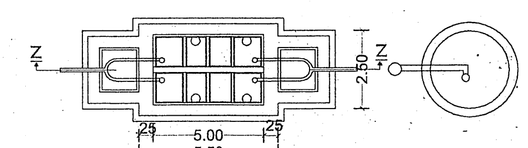

PLAN OF SEPTIC TANK & SOAK PIT

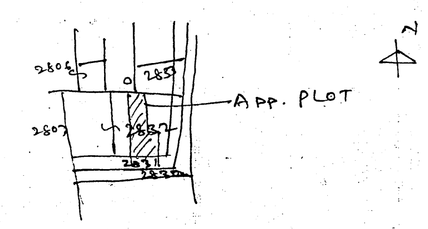

KEY PLAN
SCALED 1"=330'0"

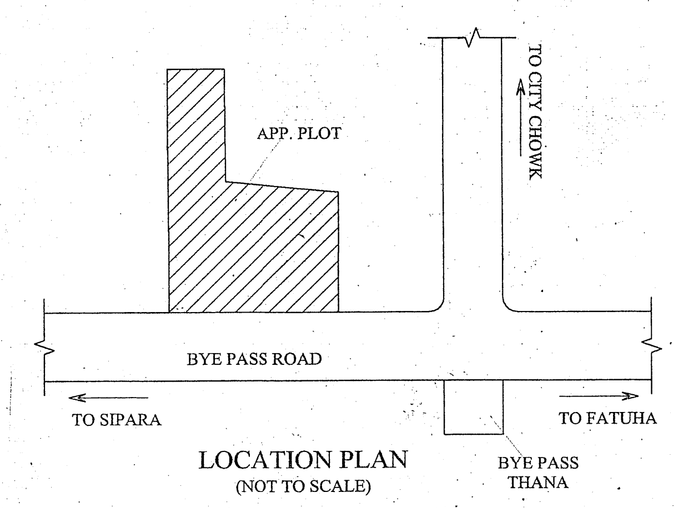

LOCATION PLAN
(NOT TO SCALE)

WATER TANK CALCULATION.

TOTAL BUILT UP AREA = 6609.66 SQM.
TOTAL CARPET AREA = 6609.66/2 = 3304.83 SQM.
ASSUME 10 sqm CARPET AREA = 1 PERSON
HENCE 3304.83sqm. CARPET AREA = 330 PERSON
ASSUME 50 LTR. WATER CONSUMPTION/PERSON/DAY
TOTAL WATER REQUIRED= 50 X 330
= 16500 LTR + 20% EXTRA = 19800LTR. = 19.80Cum.

TOTAL SIZE OF WATER TANK PROVIDED
= 1) 5.36 x 3.25 x 1.00 = 17.42 cum
= 2) 5.05 x 2.34 x 1.00 = 11.81 cum
= 3) 5.08 x 3.35 x 1.00 = 17.01 cum
= 4) 4.80 x 3.05 x 1.20 = 17.56 cum
= 63.80 cum

RAIN WATER HARVESTING CALCULATION.

TERRACE FLOOR AREA = 842.45 m²
RECHARGE PIT CAPACITY @ 6 CUM. FOR 100 SQM.
SO, 842.45 SQM. REQUIRED RECHARGE PIT
AREA = 842.45/100 X 6.00 = 50.55 m3
RECHARGE PIT SIZE PROVIDED
= 7.00 X 2.00 X 4.00 = 56.00 m3

GREEN AREA CALCULATION

TOTAL PLOT AREA = 2163.52 m²
GREEN AREA REQUIRED @10% = 216.36 m²
GREEN AREA PROVIDED (28.5.72)+(31.57+31.04+68.24)+(35.84x1.5)
= 231.74 m²

PARKING CALCULATION

PARKING AREA REQUIRED (AS/TABLE NO-19, S.No-1)@ 30% OF 6609.66Sqm. = 1982.89 Sqm.
TOTAL PARKING AREA REQUIRED
= 1982.89 Sqm.
PARKING AREA PROVIDED AT COV. LOWER BASEMENT.
= 1066.90 - LOWER BASEMENT FLOOR B/U AREA
= 1066.90 - 16.41 = **1050.49SQM.**
PARKING AREA PROVIDED AT COV. UPPER BASEMENT
= 741.92 - UPPER BASEMENT B/U AREA
= 741.92 - 8.88 = **733.04 SQM.**
PARKING AREA PROVIDED AT FRONT OPEN SPACE
= 39.25 X 5.48 = 215.09 **SQM.**
TOTAL PARKING AREA PROVIDED
= 1050.49 + 733.04 + 215.09 = **1998.62 SQM.**

SEPTIC TANK CALCULATION.

TOTAL BUILT UP AREA = 6609.66 SQM.
TOTAL CARPET AREA = 6609.66/2 = 3304.83 SQM.
ASSUME 10 sqm CARPET AREA= 1 PERSON
HENCE 3304.83sqm. CARPET AREA = 330PERSON
CAPACITY OF SEPTIC TANK REQUIREMENT
@ 0.085 cum./ PERSON
TOTAL NO OF PERSON REQUIRED = 330 X 0.085
= 28.05 cum. + 20% EXTRA = 33.66 Cum.
TOTAL SIZE REQUIRED FOR SEPTIC TANK
= 33.66Cum.
PROVIDED SIZE OF SEPTIC TANK
= 5.00 X 2.50X 3.00 = 37.50Cum.

SPECIFICATION

(1) FOUNDATTION : - R.C.C. PILE FOUNDATION
(2) SUPER STRUCATURE . - 1st CLASS BRICK WORK IN CEMENT MOTER 1:8.
(3) FLOORING : - .025 TH I. P .S FLOORING OVER .15 DRY RAMMED KHOA OVER ONE LAYER BRIK FLAT SOLING . OVER LOCAL SAND FILLING.
(4) R.C.C. WORK : - SLAB, LINTEL , STAIR, BEAM & CHAJJA IN 1 : 1-1/2 : 3 WITH PROPER REIN FOR CEMENT .
(5) TERRACING:- 10TH AVERAGE LIME TERRACING OVER .10 TH R .C.C .ROOF SLAB
(6) PLASTER : - .012 TH CEMENT PLASTER ON BOTH SIDE WALL & .006 CEMENT PLASTER ON CELING .
(7) DRAIN : - 18 CM WIDE & 30 CM DEEP PUCCA DRAIN ROUND IN THE BUILDING .
(8) COLOUR : - AS PER CHOICE .

AREA CALCULATION

TOTAL PLOT AREA (AS/DEED) ----------	3441.39 Sqm.
TOTAL PLOT AREA (AS/AGREMENT)---------	2163.62 Sqm.
TOTAL PLOT AREA (AS/POSESSION)---------	2377.02 Sqm.
AREA LEFT FOR EXCESS LAND ---------	213.52 Sqm.
NET PLOT AREA ----------	2163.52 Sqm.
LOWER BASEMENT FLOOR B/U AREA ----------	16.41 Sqm.
UPPER BASEMENT FLOOR B/U AREA ----------	8.88 Sqm.
GROUND FLOOR B/U AREA ----------	814.64 Sqm.
1ST. FLOOR B/U AREA ----------	821.23 Sqm.
2ND. FLOOR B/U AREA ----------	824.75 Sqm.
3RD. FLOOR B/U AREA ----------	824.75 Sqm.
4TH. FLOOR B/U AREA ----------	824.75 Sqm.
5TH. FLOOR B/U AREA ----------	824.75 Sqm.
6TH. FLOOR B/U AREA ----------	824.75 Sqm.
7TH. FLOOR B/U AREA ----------	824.75 Sqm.
TOTAL B/U AREA ----------	6609.66 Sqm.

F.A.R. = 3.06

PROJECT:-

PROPOSED RESIDENTIAL BUILDING FOR
1. SRI SHAILENDRA KUMAR, S/o- LATE SHIYA SHARAN SINHA,
2. SRI SANJEEV KUMAR S/O - LATE MEHTA KEDAR NATH,
3. SRI NAWAL KISHOR PRABHAKAR] S/O - LATE RAMESHWAR PRASAD SINHA
4. SRI SHIV SHANKAR KUMAR
5. SRI RAVI SHANKAR KUMAR] S/O - SRI NAWAL KISHOR PRABHAKAR
6. SRI RANDHIR KUMAR
7. SRI SHASHANK SHEKHAR] S/O - SRI SHIV SHANKAR KUMAR
8. SRI DIVYANSHU SHEKHAR
9. SRI PRIYADARSHI MANOJ
10. SRI PRIYADARSHI MANOBHAV Alias PRIYADARSHI
BOTH S/O - SRI DIVESH NANDAN PRASAD
MAUZA - RANIPUR , P.S. - MEHANDIGANJ, WARD NO. - 46/61,
THANA NO - 19, TAUZI NO. - 1483, SHEET NO. - 228,
KHATA NO - 1012, S.PLOT NO.- 2831 & 2832,
M. S. PLOT NO. - 4394 & 4391, DIST. - PATNA (BIHAR).

M/S RUDRA CONSTRUCTIONS

Sunil Kumar	Er. Shailesh Ranjan B.Ex.(Engg) Civil & M.E Engg Reg.No.(Patna) P.M.C.Patna
शिव शंकर कुमार, प्रियदर्शी, प्रियदर्शी मनोज, रणधीर कुमार, नवल किशोर प्रसाद, Shashank Shekhar	SIGNATURE OF ARCH./ENG.
रवि शंकर कुमार Shalendra Kumar	SIGNATURE OF STR. ENG.
SIGNATURE OF OWNER	

PATNA MUNICIPAL CORPORATION
PATNA REGIONAL DEVELOPMENT AUTHORITY (DISSOLVED)
Case No. P/Resi/Part-Pcs-LB-4/B4/Gr-7/2020/19
Sanction of Plan accorded under Section 314, 315, 316 & ... Municipal Act 2007
by the Municipal Commissioner, Patna on 01/08/19
SANCTION OF PLAN ACCORDED
गुलाम रब्बानी
उप निदेशक
पटना नगर निगम