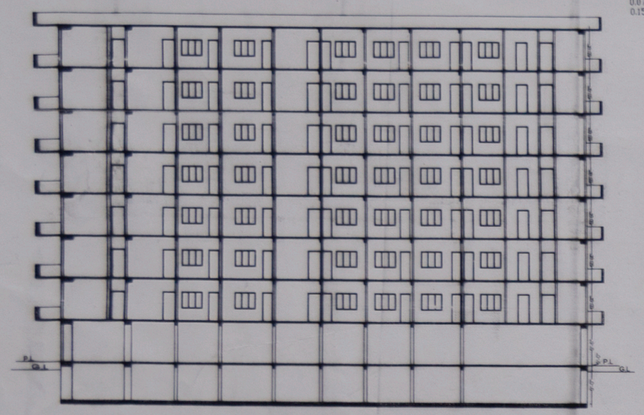

SECTION Y-Y

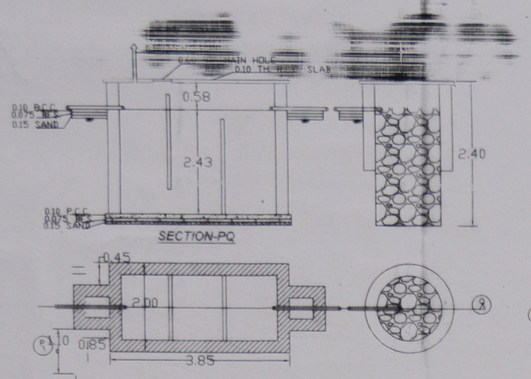

DETAIL OF SEPTIC TANK & SOAK-PIT

(SCALE:-NOT TO SCALE)

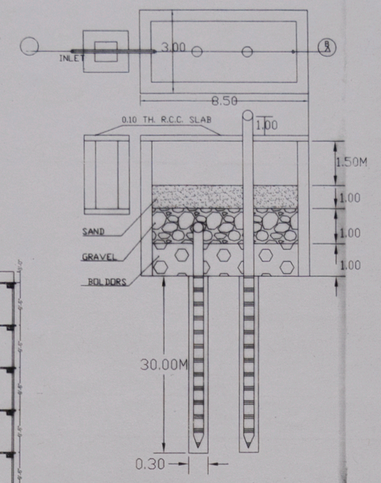

SECTION-AB

DESIGN OF REHARGE WELL

(SCALE:-NOT TO SCALE)

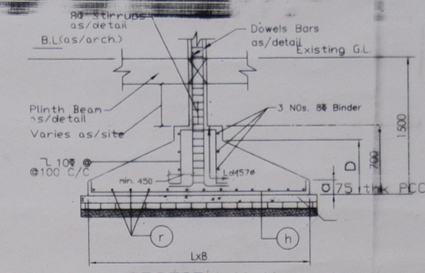

SECTION X-X

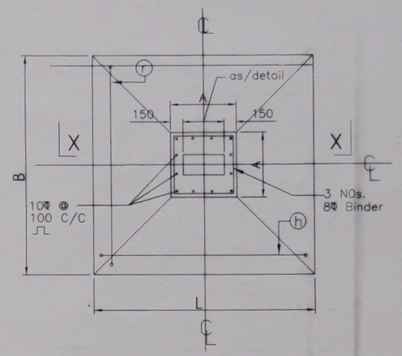

TYP DETAIL OF ISOLATED FOOTING

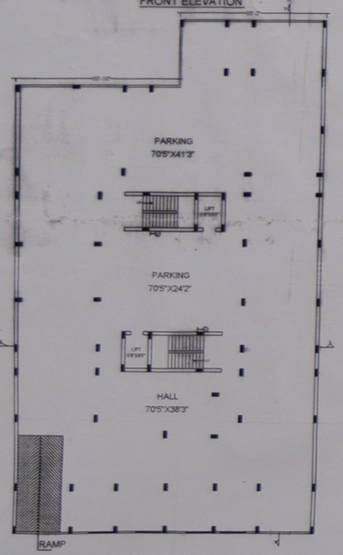

BASEMENT PLAN

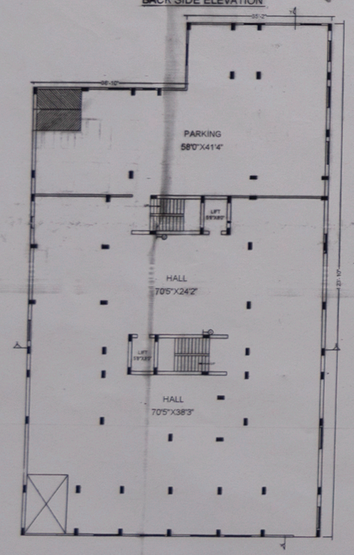

GROUND FLOOR PLAN



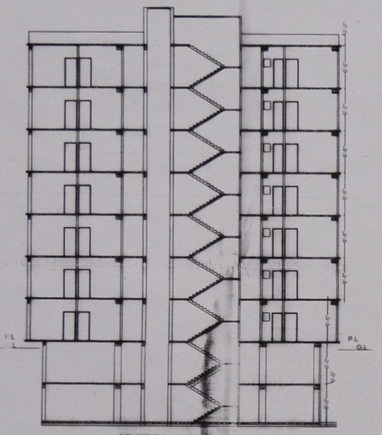

SECTION X-X

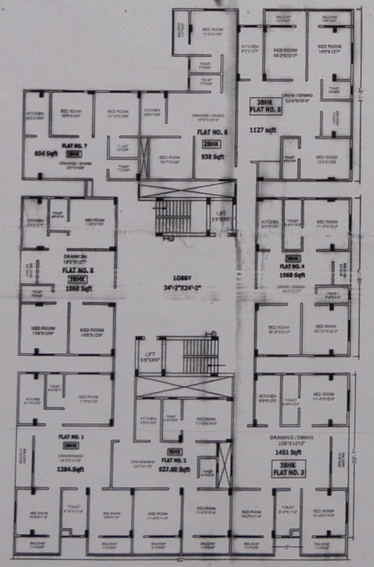

1ST TO 7TH FLOOR PLAN

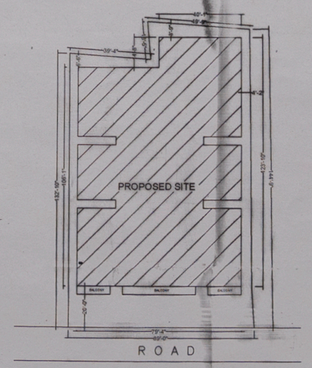

SITE PLAN

NOT TO SCALE

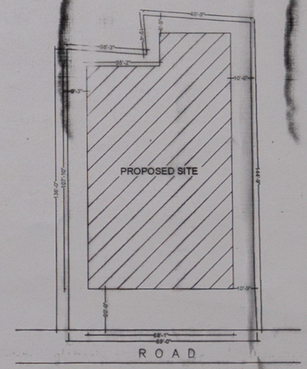

SITE PLAN

NOT TO SCALE

PLOT DETAIL

PROPOSED COMMERCIAL/RESIDENTIAL BUILDING OF
(1) SRI RAJESH KUMAR, S/O- LATE JANARDAN PRASAD SAH,
(2) SMT URMILA DEVI, W/O- LATE PHULESWAR SAH,
(3) SUMITRA DEVI, W/O- SUBHASH PRASAD SAH,
MOUZA- FATEHPUR,[illegible],THANA NO-23,
JAMABANDI NO-1762,1763,1764,1765,[illegible],2415,
KHATA NO-532,533,328,KHESRA NO. 788,789,
ANCHAL- SABOUR,DIST-BHAGALPUR(BIHAR),Rakwa-12292.00 Sqft

SPECIFICATION

1. FOUNDATION:- SHOWN IN DETAILS.
2. D.P.C.:- 2.5 CM TH. IN CEMENT CONCRETE(1:2:4)WITH DAMP PROOF.
3. SUPER STRUCTURE:-FIRST CLASS BRICK WORK IN CEMENT MORTAR(1:6).
4. LINTEL:- 15 C.M. R.C.C. LINTEL(1:2:4)
5. FLOORING:-2.5C.M. TH. I.P.S. FLOORING OVER 10 C.M. CONCRETE OVER 10 C.M. DRY RAMMED KHOA FINISHED WITH CEMENT PUNNING.
6. ROOF :- 10 C.M. R.C.C. ROOF SLAB (1:2:4).
7. WOOD :- SAL & TEAK WOOD.

FIRE LEGEND

1.	UNDER GROUND WATER STATIC TANK OF 10.000 CAPACITY	10,000
2	SEAVESE CONNECTION	E
3	HYDRANT	H
4	HOSE REEL	
5	FIRE RESISTANCE CHEAK DOOR	FP
6	EMERGENCY LIGHT	
7	ALLUMINATION EXIT SIGN	EXIT
8	OVER HEAD WATER TANK 10,000 LITERS CAPACITY	10,000
9	MANNUAL CALL ALARM SYSTEM	

STATEMENT OF AREA

1.TOTAL AREA:-12292.00 Sqft

*.BUILT UP AREA(BASEMENT STAIR, LIFT ,RAMP AREA):- 692.00 Sqft
*.BUILT UP AREA(GROUND FLOOR PARKING AREA):- 2417.00 Sqft
*.BUILT UP AREA(GROUND FLOOR COMMERCIAL AREA):- 2417.00 Sqft
*.BUILT UP AREA(FIRST FLOOR):- 9116.00 sqft
*.BUILT UP AREA(SECOND FLOOR):- 9116.00Sqft
*.BUILT UP AREA(THIRD FLOOR):- 9116.00 Sqft
*.BUILT UP AREA(FOURTH FLOOR):- 9116.00 Sqft
BUILT UP AREA(FIFTH FLOOR):- 9116.00 Sqft
*.BUILT UP AREA(SIXTH FLOOR):- 9116.00 Sqft
*.BUILT UP AREA(SEVENTH FLOOR):- 9116.00 Sqft

SCHEDULE OF DOOR & WINDOW

SL.NO.	TYPE	SIZE	LINTEL LEVEL	REMARKS
1.	D	1.10X2.10	2.10	FULLY PANNELED DOOR.
2.	D_1	0.90X2.10	2.10	FULLY PANNELED DOOR.
3.	D	0.90X2.10	2.10	FULLY PANNELED DOOR.
4.	W_2	0.75X2.10	2,10	FULLY PANNELED DOOR.
5.	W_1	1.50X1.20	2.10	FULLY GLAZED WINDOW.
6.	V	0.90X1.20	2.10	FULLY GLAZED WINDOW.
SCALE:-		0.60X0.30	2.10	FULLY GLAZED VENTILATION.

1:100,1:200

N

1. [illegible]
2. उर्मिला देवी
3. सुमित्रा देवी

APPLICANT

Gopal
A. Gopal
Regd. No-5/2005
Jd. Civil Engineer
B.R.D.A. Bhagalpur

DRAWN BY

[illegible] सबौर - फतेहपुर बाजार रोड 23 के दक्षिण [illegible]

क्रम	प्लॉट	खेसरा	एकड़ा	स्क्वायर फीट	चौहद्दी विवरण
1	533	789	1208'00"	1763	रास्ता कुमा पि० [illegible]
2	533	790	1210'00"	3415	पश्चिम - [illegible]
3	328	787	8550'00"	1762	
4	328	789	3728'00"	4632	
	533	790			
5	533	790	1208'00"	1766	पूर्व [illegible]
6	533	790	1208'00"	1765	[illegible]
7	533	790	1210'00"	1764	[illegible]

[illegible] 30M-15.55 [illegible] 2+G+2 [illegible] 2+G+7 [illegible]

PASSING AUTHORITY