PLOT BOUNDARY :-

NORTH - KHESRA NO. 8039 PART

SOUTH - MAHADEV CHOWK ROAD

EAST - KHESRA NO. 8039 PART

WEST - DHEERAJ NAYAN & PRANAV ROSHAN

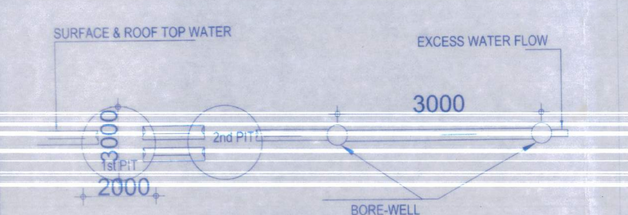

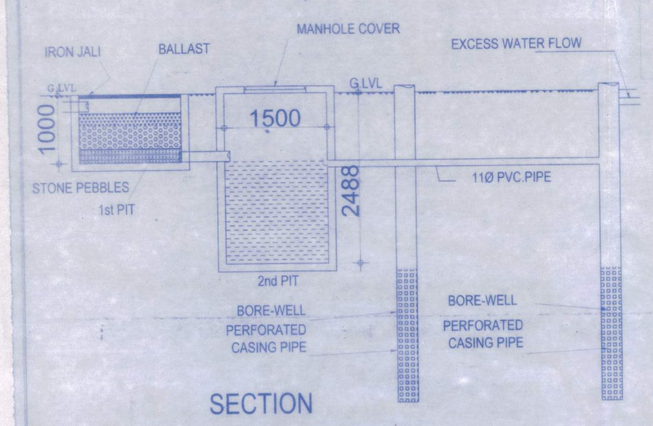

RAIN WATER HARVESTING SYSTEM

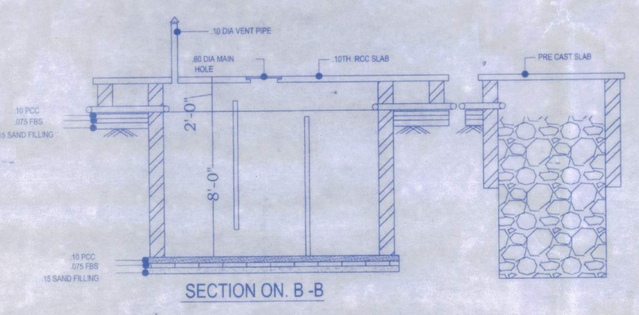

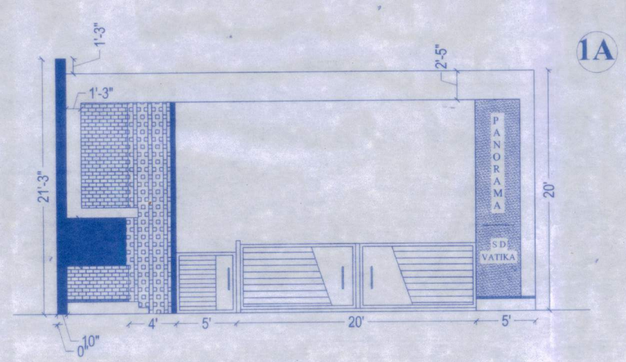

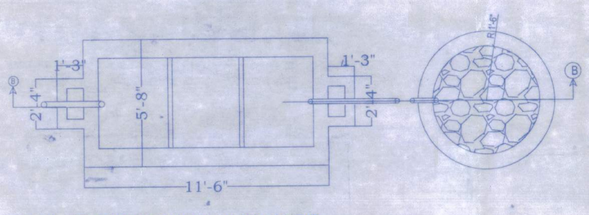

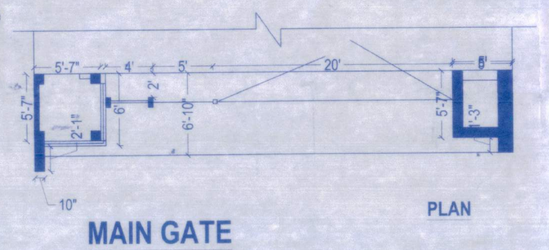

MAIN GATE

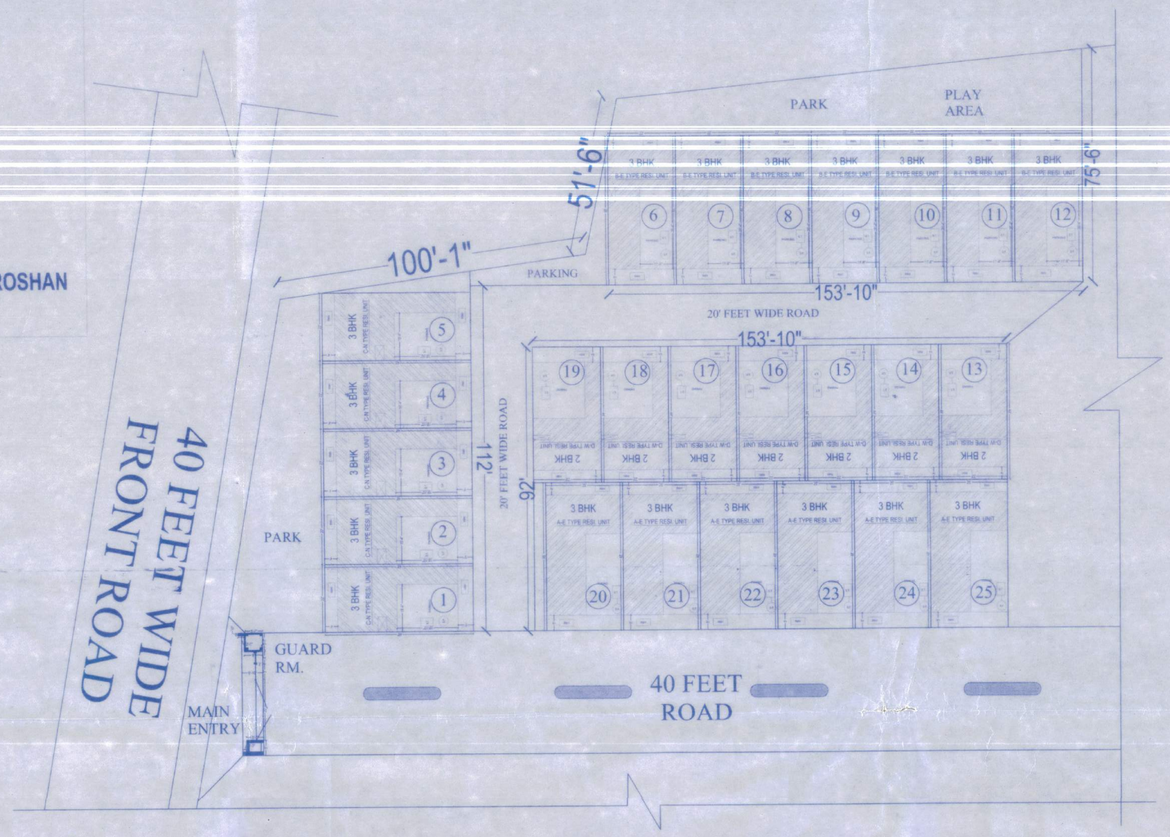

1A PLOTTED DEVELOPMENT- SITE PLAN (SCALE- 1:200)

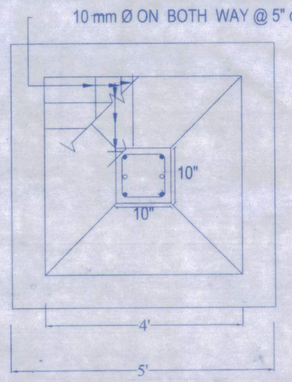

3" P.C.C (1.3.6)
3" F.B.SOLING
4" R.SAND FILLING

PLAN OF COLUMN FOUNDATION

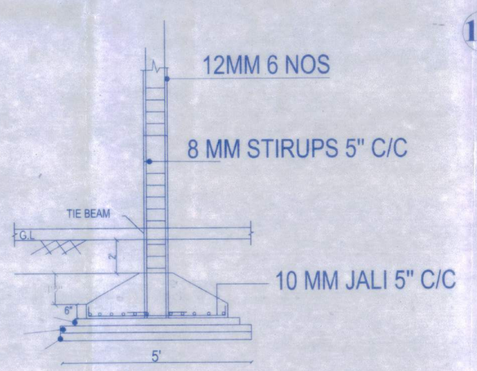

SECTION OF FOUNDATION

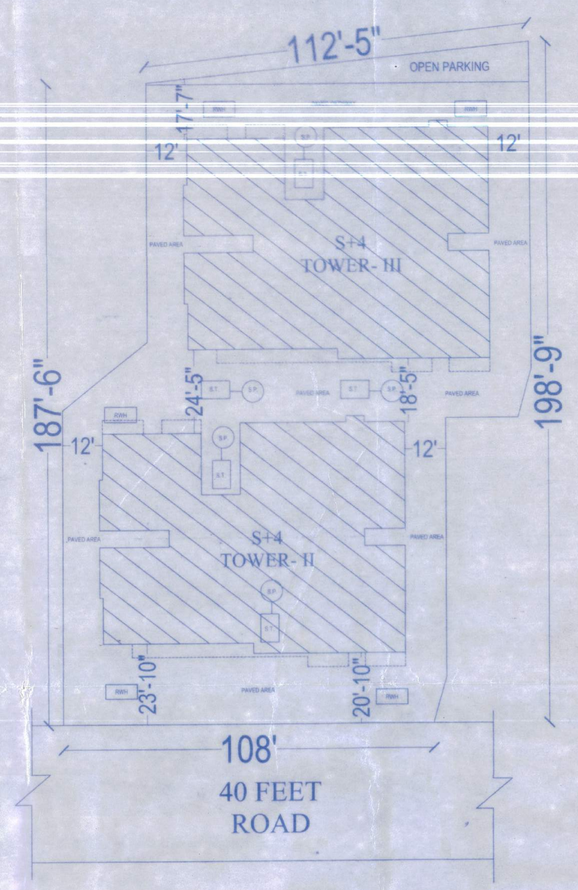

1C SITE PLAN - TOWER II and TOWER III (SCALE- 1:200)

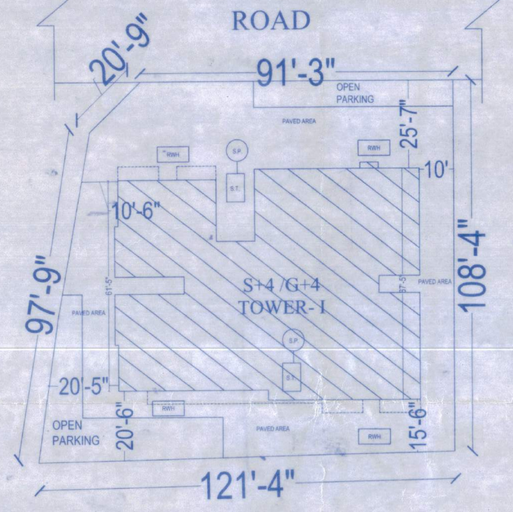

1B SITE PLAN - TOWER I (SCALE- 1:200)

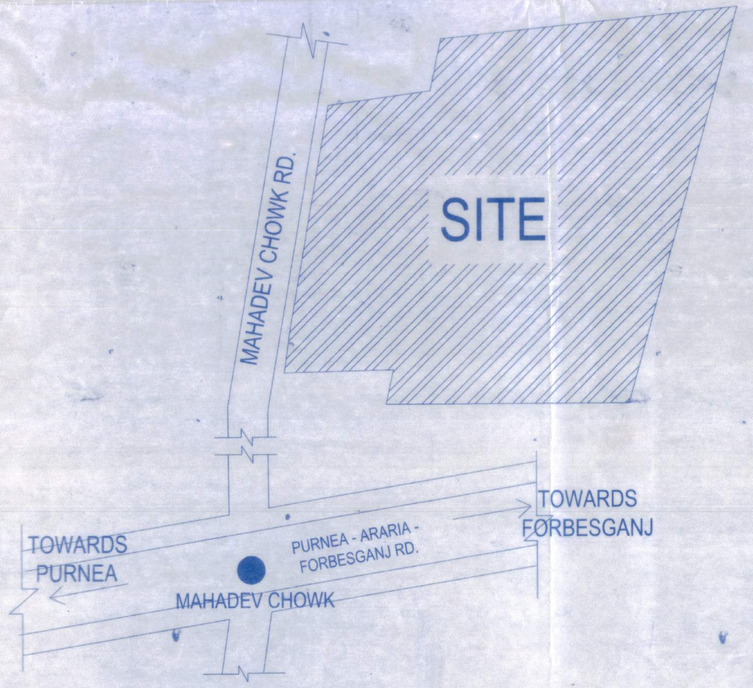

LOCATION / KEY PLAN (SCALE- NTS)

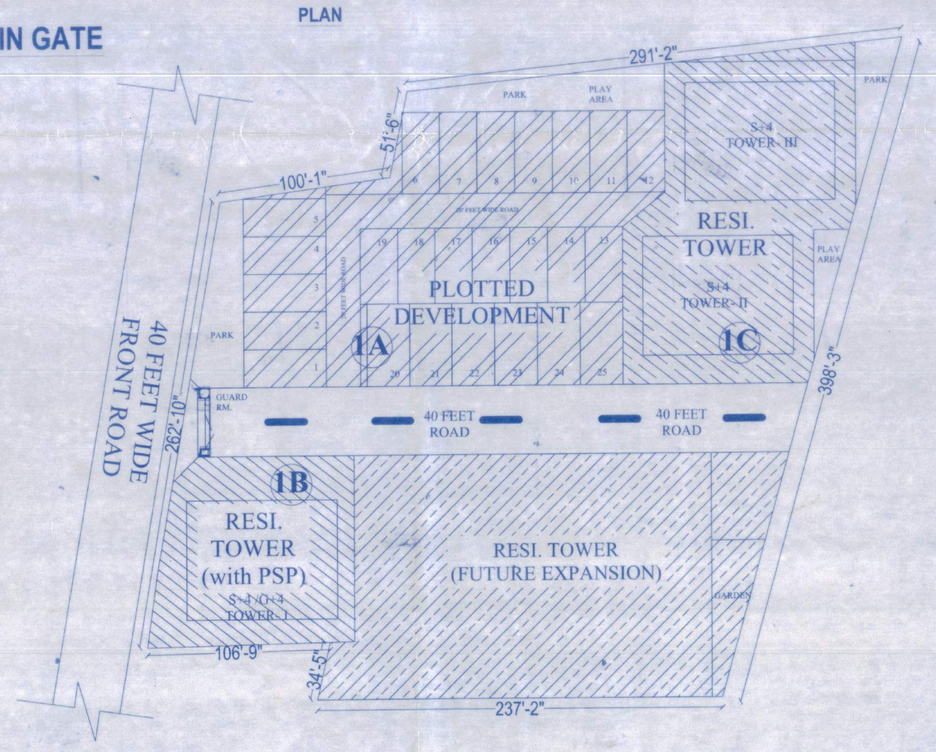

CAMPUS DEVLOPMENT PLAN (SCALE- 1:500)

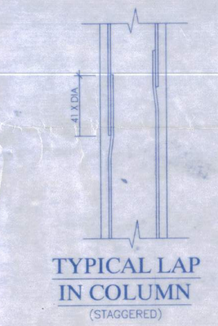

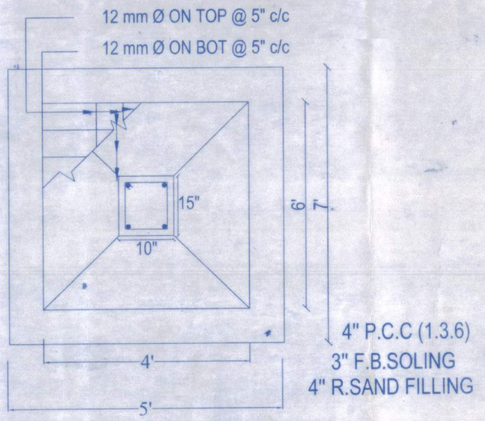

FOUNDATION DETAILS

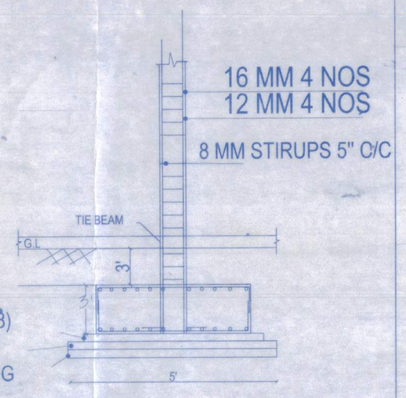

GENERAL NOTES :-

01 :- ALL DIMENSIONS ARE IN FEET & INCHES.
02 :- AMBIGUITY IF ANY SHOULD BE BROUGHT TO THE NOTICE OF ARCHITECT.
03 :- DO NOT SCALE , ONLY WRITTEN DIMENSIONS ARE TO BE FOLLOWED.
04 :- UNDER NO CIRCUMSTANCES , COLUMN VERTICAL BARS SHALL BE BENT TO ACCOMMODATE BEAM BARS.
05 :- BARS FOR LINTEL BAND SHALL BE PROVIDED IN COLUMNS.
06 :- ALL CONCRETE MIX SHALL BE M20 , UNLESS OTHERWISE SPECIFIED.

SPECIFICATION

01 :- FOUNDATION: ISOLATED R.C.C. FOOTING WITH TIE BEAM AT G.L/T.O.P.L.
02 :- SUPER STRUCTURE: 9"TH EXTERNAL AND 4.5"TH INTERNAL WALL WHERE NEEDED UP TO CEILING HEIGHT AND PARAPET WALL.
03 :- PLINTH : PLINTH BAND AS PROPOSED.
04 :- LINTEL : 6"R.C.C.BAND IN 1:1.5:3 ALL AROUND OVER DOORS / WINDOWS AND OPENING
05 :- ROOF : 4"THK. R.C.C. SLAB IN 1:1.5:3MIX
06 :- BEAM R.C.C. :1:1.5:3 AS PER REQUIREMENT
07 :- FLOORING : VETRIFIED TILES IN LIVEKING AND BED ROOM TOILET : BRANDED ANTISKID FLOOR TILES. KITCHEN GRANITE KITCHEN PLATFORM WITH STAINLESS STEEL SINK
08 :- PLASTER : 2"THK CEMENT PLASTER ON SMOOTH , 3"THK ON ROUGH SURFACE AND 1"THK CEILING PLASTER
09 :- FINISHING : DRY / OIL BOND DISTEMPER FOR INTERNAL WALL AND WEATHER COAT PAINT FOR EXTERNAL WALL
10 :- STAIRS : AN OPEN WELL STAIR CASE HAVING RISE 6" TREAD 10" AND HEIGHT OF RAILING 3'

DOOR and WINDOW SCHEDULES

TYPE	WIDTH	HEIGHT	SILL	REQ.
D	8'-0"	7'-0"		
D1	3'-6"	7'-0"		
D2	3'-0"	7'-0"		
D3	2'-6"	7'-0"		
W1	8'-0"	4'-6"	2'-6"	
W2	6'-6"	4'-6"	2'-6"	
W3	4'-0"	4'-0"	3'-0"	
V1	2'-0"	1'-6"	5'-6"	

AREA CALCULATION

TOTAL PLOT AREA AS PER DEED = 1,23,261.00 SFT
INTERNAL ROAD AREA DEVELOPMENT = 20,078.00 SFT
PLOT AREA LEFT AFTER ROAD FORMATION = 1,03,183.27 SFT
LAND AREA TO BE DEVELOPED IN PHASE-I = 69,158.27 SFT

PRO. G. FLOOR BUILT UP AREA (A-E TYPE) = 6 X 643.00 SFT
PRO. FIRST FLOOR BUILT UP AREA (A-E TYPE) = 6 X 867.00 SFT
PROVIDED PARKING AREA FOR A-E TYPE UNITS = 6 X 320.00 SFT
TOTAL = 10,980.00 SFT

PRO. G. FLOOR BUILT UP AREA (B-E TYPE) = 7 X 539.00 SFT
PRO. FIRST FLOOR BUILT UP AREA (B-E TYPE) = 7 X 730.00 SFT
PROVIDED PARKING AREA FOR B-E TYPE UNITS = 7 X 307.00 SFT
TOTAL = 11,032.00 SFT

PRO. G. FLOOR BUILT UP AREA (C-N TYPE) = 5 X 477.00 SFT
PRO. FIRST FLOOR BUILT UP AREA (C-N TYPE) = 5 X 826.50 SFT
PROVIDED PARKING AREA FOR C-N TYPE UNITS = 5 X 304.00 SFT
TOTAL = 8,037.50 SFT

PRO. G. FLOOR BUILT UP AREA (D-W TYPE) = 7 X 400.00 SFT
PRO. FIRST FLOOR BUILT UP AREA (D-W TYPE) = 7 X 742.50 SFT
PROVIDED PARKING AREA FOR D-W TYPE UNITS = 7 X 304.00 SFT
TOTAL = 10,125.50 SFT

PRO. G. FLOOR BUILT UP AREA (TOWER I) = 1 X 1,540.00 SFT
PRO. 1ST, 2ND, 3RD & 4TH FLOOR BUA (TOWER I) = 4 X 5,136.00 SFT
PROVIDED PARKING AREA FOR TOWER I = 5,193.00 SFT
TOTAL = 25,874.00 SFT (1403 SFT (Op) + 3790 SFT (C))

PRO. G. FLOOR BUILT UP AREA (TOWER II) = 1 X 163.00 SFT
PRO. 1ST, 2ND, 3RD & 4TH FLOOR BUA (TOWER II) = 4 X 5,136.00 SFT
PROVIDED PARKING AREA FOR TOWER II = 5,063.00 SFT (C)
TOTAL = 25,770.00 SFT

PRO. G. FLOOR BUILT UP AREA (TOWER III) = 1 X 163.00 SFT
PRO. 1ST, 2ND, 3RD & 4TH FLOOR BUA (TOWER III) = 4 X 5,136.00 SFT
PROVIDED PARKING AREA FOR TOWER III = 5,063.00 SFT (C)
TOTAL = 25,770.00 SFT

TOTAL PARKING AREA
(Closed- 3966sft + Covered- 17667sft + Open- 1403sft) = 23,036.00 SFT
TOTAL BUILT UP AREA = 99,925.50 SFT
F.A.R. = 0.97 BUA (PHASE - I) = 99,925.50 SFT
NET PLOT AREA = 1,03,183.27 SFT
AREA FOR FEES (BUA+ PARKING AREA (C)) = 1,17,592.00 SFT
AREA FOR GREEN SPACE = 9,284 SFT (8.9%)

PLOT DETAILS:-

PROPOSED CAMPUS DEVELOPMENT , ROW HOUSE AND RESI. TOWERS (PHASE- I) PLAN FOR
SHRI. SANJAY KUMAR MISHRA,
S/O SHRI. DAMODAR MISHRA,
AT:- BASANTPUR,
MAUZA- BASANTPUR
KHATA NO. - 2438
KHESRA NO. - 8039
THANA NO. - 206
HOLDING NO. -
WARD NO. - 09
DIST- ARARIA (BIHAR)

SHEET NO. 01 SCALE 1:10, 1:50, 1:200, 1:500

Saurabh Kumar Mishra 2.11.23

SAURABH KUMAR MISHRA
Registered Architect
UDHD, Govt. of Bihar
CoA Reg No. - CA/2019/14348

SIGN. OF OWNER SIGN. OF ARCHITECT

SANCTIONED WITH CONDITIONS AS MENTIONED IN SANCTIONING LETTER AND INFORM VIII (A) AMY DEVIATION FROM ESTABLISHED PROCEDURE AS MENTIONED IN BIHAR BUILDING BYE LAWS 2014 AND IN BIHAR MUNICIPAL ACT 2007 OR DEVIATION FROM SANCTIONED MAP WILL LEAD TO SELF CANCELATION OF SANCTIONING ORDER

6/11/23
नगर कार्यपालक पदाधिकारी
नगर परिषद, अररिया

नगर परिषद अररिया