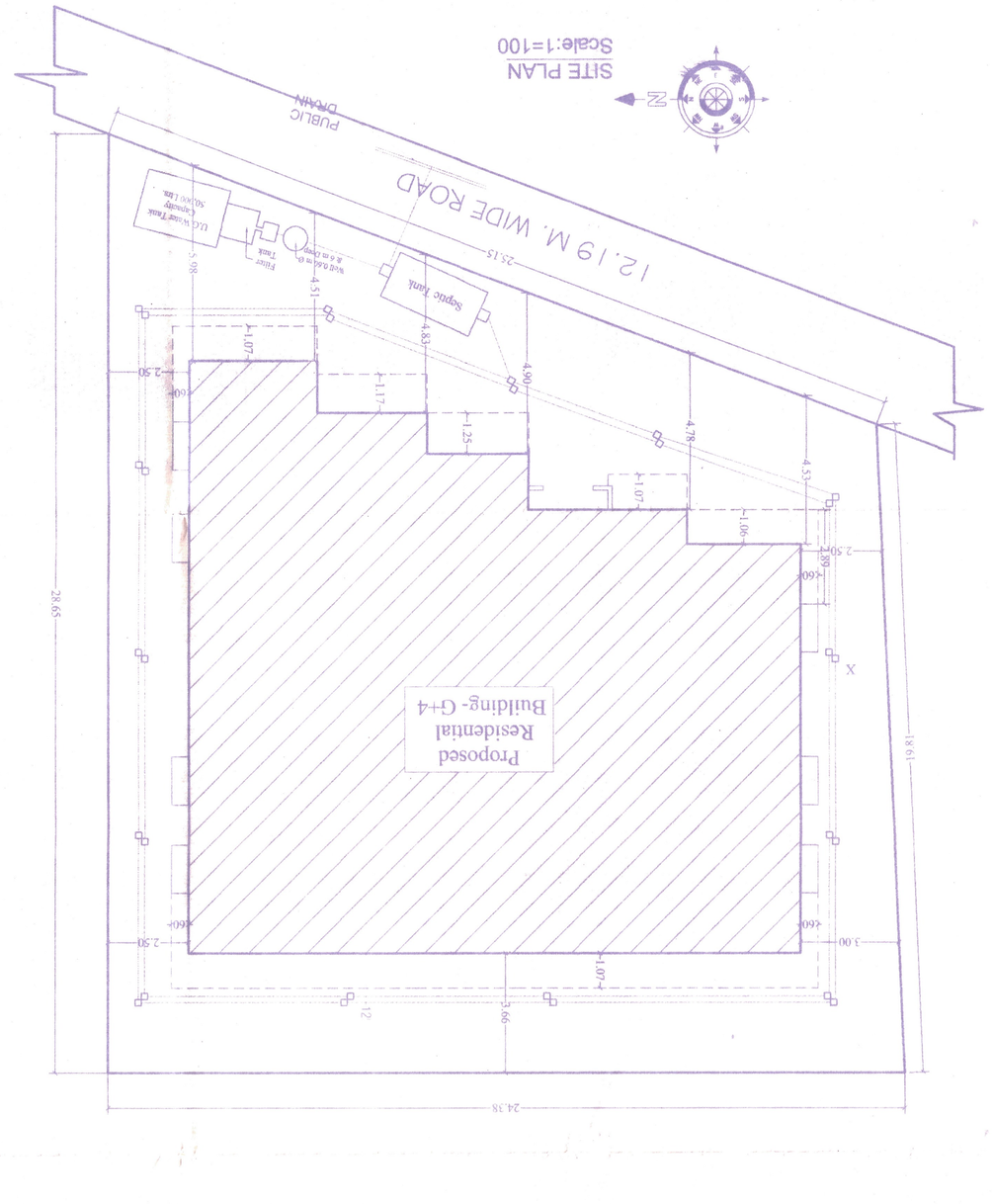
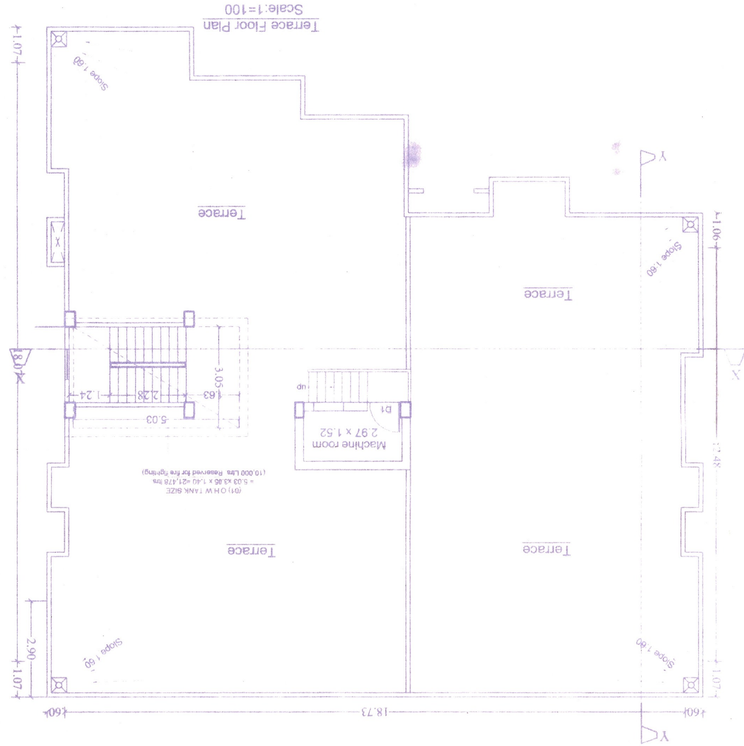
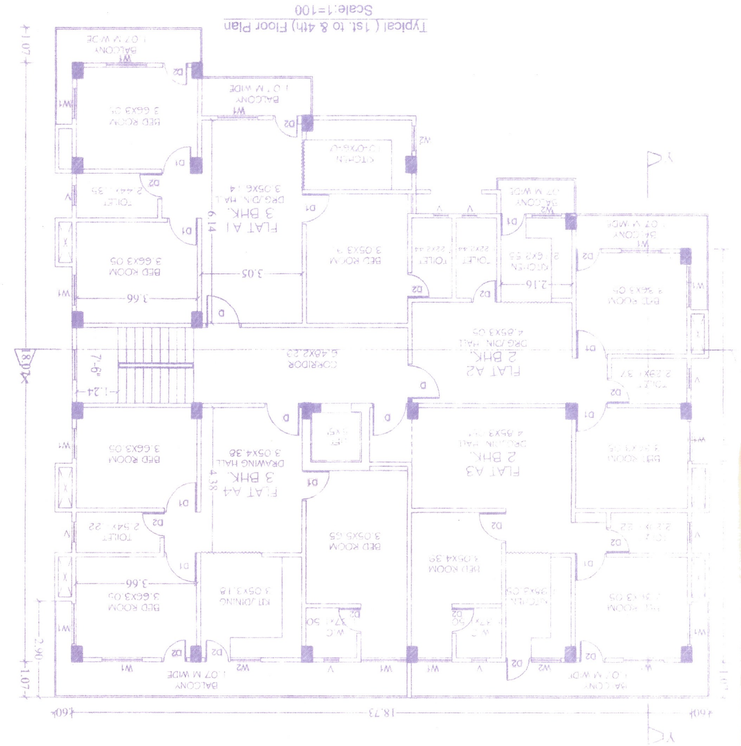
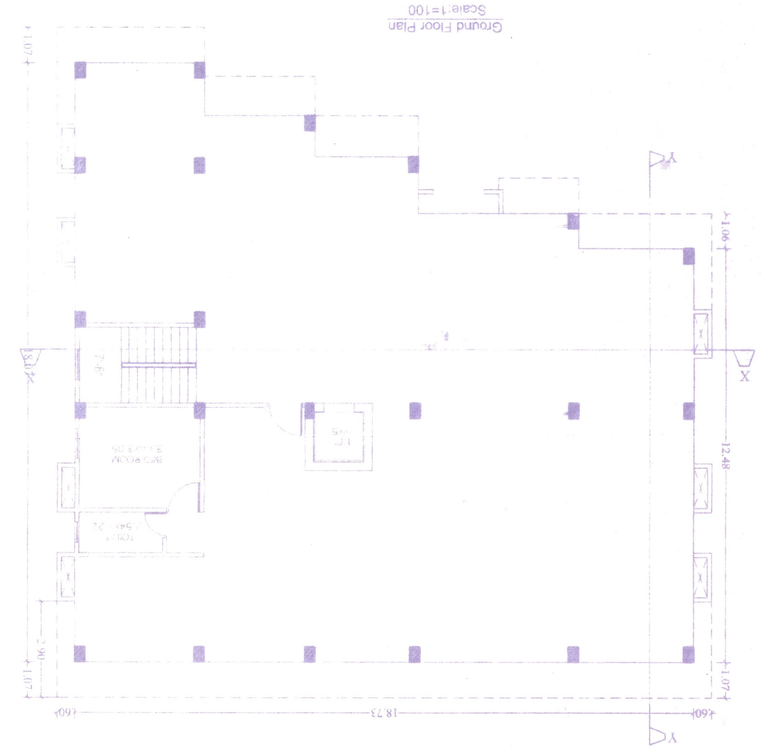
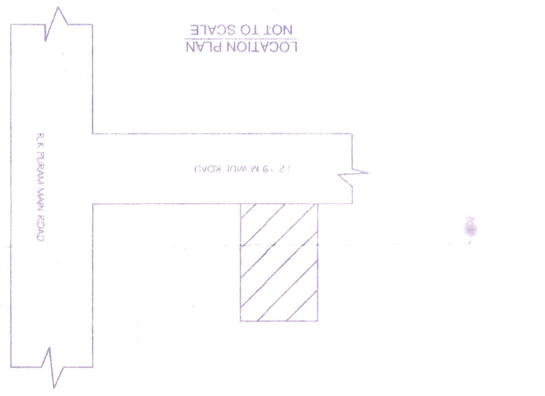


SITE PLAN
Scale:1=100

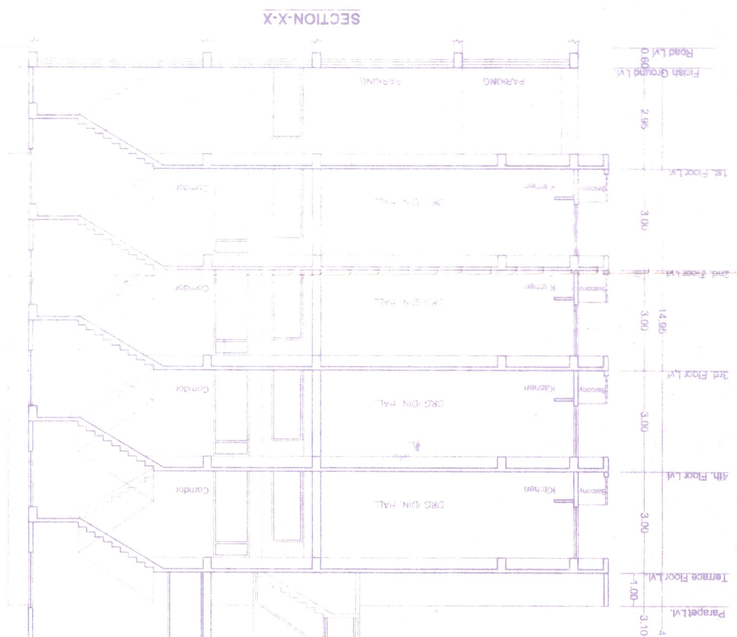




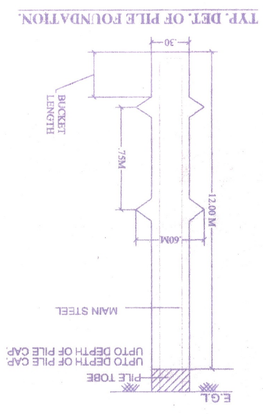


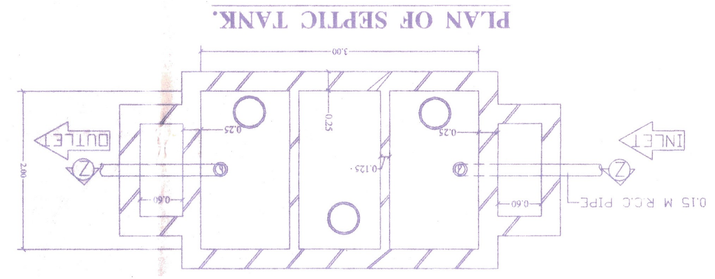


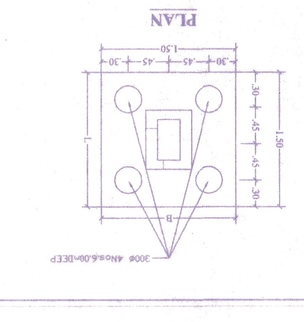


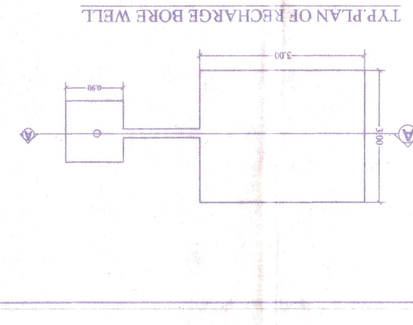


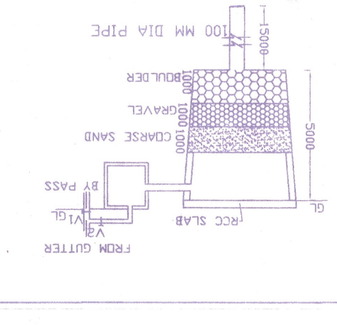




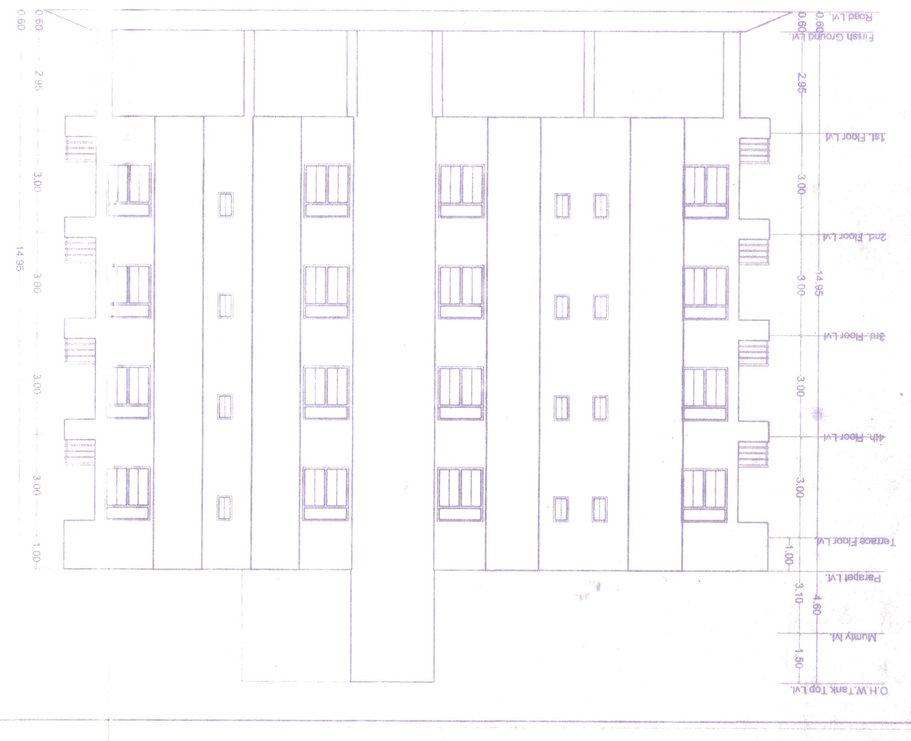












Proposed Residential Building- G+4

Building Plan No. 0383-24
Date 27/01/24

Nagar Panchayat Deogaon Nizamat
A.E.

Nagar Panchayat Deogaon Nizamat
J.E.

Construction certificate given
27/01/2024

Certificate/Occupancy Certificate shall be granted after verification of completion of construction as per the approved plan & the Compliance Report submitted by the Registered Architect/Engineer/Supervisor. The Certificate/Occupancy Certificate shall be granted only if the construction is found to be in accordance with